ODYSSEY®

CELEBRATING 25 YEARS OF LEADING THROUGH INNOVATION

25TH ANNIVERSARY
Established 1995

PRODUCT GUIDE

TABLE OF CONTENTS

BRAND SPECIFIC

American Audio 5
Denon 5,6,60
Gruv Glide 55
Native Instruments. 6,7,8,15
Numark 7,8,60
Pioneer 8,9,10,11,12,13,60
Rane 13,14,60
Reloop 14
Roland 14,60
Serato 50,51
Traktor. 15,60

CATEGORY

back packs 56,58,59
carts 68
cartridge cases 54
cd cases 31,47,54
cdj bags. 61
cdj cases 15,16,20,21,53,61
cdj coffins 13,15,16,21
chairs & benches 83
clamps & couplers 74,75
controller bags. 57,61
controller cases 22,23,53
dollies 65
façades 78,79,80
flatscreen cases. 33
foldout stands 63,64,65
gear stands 66
gloves 87
guitar amp cases 30
guitar pedal cases 30
headphone bag & cases. 59
keyboard 67
keyboard cases 32,40
keyboard covers 32
laptop stands. 66
light column - totem 76,77
lighting control cases. 33
lighting stands 69,70,71
live sound cases 35,36,37
microphone cases 31
mixer bags. 59,61
mixer cases - DJ 18,19,21,22,53
mixer cases - pro audio 19,36
moving head cases 33
par cans 73
photo booths 83
printer cases 82,83
rack - combo. 27,28,29,43,44,45
rack - effects & amp 24,25,26
rack accessories 84,85,86
rack bags 62
record cases & organizer 31,47,53,54,61
sampler bag & cases 7,37,57,60,61
scrim - décor. 80
scrim - tripods. 81
scrim - truss 76
scrim - xstands 81
speaker bags. 57
speaker mounts. 77
speaker stands 69
speaker stretch covers. 77
studio racks. 46
tables 4, 63,65
table covers. 82
tools 87
trunks 33, 37
truss bags 56,71
truss systems 70,71,81
turntable cases 8,17,18,20,21,22,41,53
turntable coffins. 8,13,17,18,22,41
uplighting covers 79
USB drive pouch 59
utility bags. 61
utitity cases. 33,37,39,40,53,56,57,59
video screen systems. 72
workboxes. 29
x stands. 65

Disclaimer: Odyssey Innovative Designs strives to ensure the accuracy of the information contained herein. However, due to the constant change in raw materials available and used, improvements in design, typographical errors, and other factors may be beyond our control. We reserve the right to make changes in designs, styles, features, colors, dimensions, and other specifications without prior notice. Copyrighted logos and trademarks are those of the respective companies. Equipment pictured not included. Actual product weights may vary.

FLIGHT ZONE®

Designed for heavy travel, rugged use, Odyssey's Flight Zone™ series of road cases are ATA certified, constructed of premium plywood and heavy-duty steel hardware.

FLIGHT READY

For everyday, mobile applications, Odyssey's Flight Ready™ series of road cases are constructed of multi-layered plywood and standard steel hardware.

STREEMLINE

THE NEW STANDARD IN DJ GEAR PROTECTION

Incredibly sleek and reinforced with stitched EVA molded shells, our Streemline™ bags are made of thick eggshell foam interiors, and embossed corners. Designed and constructed with high-grade material for strong durability, lightweight enough to ensure secure mobility. Odyssey's Streemline™ series of carrying bags feature the perfect fit.

REMIXMK2

A NEW STANDARD IN MOBILE REMIXING

Odyssey's Remix MK2™ Series of bags are ideal for the multi-gear remixer to accommodate all their digital essentials, from controllers and laptops, to tablets, cables, headphones, etc.

GS Series

For Digital DJ's

Revolutionizing the industry since its debut, Odyssey's Glide Style™ series of cases features its patented built-in Glide Style™ Platform uniquely designed to accommodate performance accessories.

FLIGHT FX™

Building on the legacy of Odyssey's Flight Zone™ cases, the Flight FX™ series creatively integrates multi-color LED panels embedded within the case walls for added flair for a DJ at center stage.

BLACK KROM

Building on the original Odyssey KROM™ series of carrying cases, the Black KROM™ series includes a Black finish, octagon steel corners for added strength.

KROM™

Odyssey's original KROM™ series of carrying cases set the standard for storing and transporting vinyl, CDs and more with its sleek all aluminum panels and chrome plated steel hardware.

Remixer™ Series

With the evolution of the performing DJs, Odyssey's Remixer™ series of cases and coffins features a full-length Glide Style™ platform to accommodate any and every gear configuration.

GSA

Odyssey's Glide Support Angled technology features a highly adjustable platform, providing an enhanced performance application with superior gear visualization and product application reach.

CARPET

Proudly Made in the USA, Odyssey's product carpeting process uses a unique dual-nail staple system, supported by industrial wood glue and premium drywall screws, for the best carpet construction in the industry.

VULCAN SERIES

Odyssey's Vulcan series of injection-molded cases feature a polymer plastic material that is water-tight, dust-proof and impact resistant and either a custom foam lined interior or diced-foam.

REDLINE™ SERIES

Designed for today's active DJ, Remixer, Producer, Odyssey's Redline™ series of bags combines fit and function with creative applications for optimal protection.

BLACK LABEL™ SERIES

The originators of sleek, all-black patented cases, Odyssey's Patented Black Label™ Series of cases is the industry standard for high quality, all-black protective cases for all applications.

DESIGNER SERIES DJ

Odyssey's Designer series of cases offers a unique twist on its Flight Ready™ cases with colorful options, from Blue to Red and beyond.

SCRIM WERKS™

Create clean and dramatic lighting effects with Odyssey's Scrim Werks™ series of decorative panels. Constructed of light-weight but durable stretch-fabric for diverse applications.

CASE DESIGN COLOR OR TEXTURE AVAILABLE IN:

- SILVER WITH BLACK
- SILVER WITH SILVER
- SILVER WITH RED
- SILVER WITH WHITE
- SILVER WITH BLUE
- DIAMOND PLATE PATTERN
- BLACK WITH BLACK
- BLACK WITH RED
- SILVER WITH BLUE

CASE MODEL STYLE MAY VARY

WE HAVE TAKING THE **ZTABLE2** TO THE NEXT LEVEL

FZGSDJZSTAND4W

ALWAYS **INNOVATIVE,** ALWAYS **ORIGINAL!**

Odyssey's ground breaking portable Z-style DJ stand was originally custom developed for our partners at RED BULL, SKULL CANDY and countless of other bands.

- All-in-one Portable Stand and Flight Case Design
- Patented Full-Length Glide Style™ Platform
- Built-in Rear Lower Shelf Design for Versatility
- Heavy-Duty Steel Corners and Rubber Feet
- Strong 3/8" and 5/8" Plywood Construction
- Built-in Roller Wheels for Convenient Transport

AMERICAN AUDIO VMS4 VMS4.1 VMS5

FRVMS5BL
- Standard Case Design

Black Label

Approx. Ext. Dim
- 21.75"x 7.25"x 19.25"
- 13 lbs.

FLIGHT READY

AMERICAN AUDIO VMS4 VMS4.1 VMS5

FZGSTKS4
FZGSTKS4BL

Standard
Black Label

Approx. Ext. Dim
- 24.5" x 8.75" x 18.25"
- 23 lbs.

FLIGHT ZONE®

DENON PRIME 4 DJ CONTROLLER CASE

FZGSPRIME4
FZGSPRIME4BL

Standard
Black Label

Approx. Ext. Dim
- 33" x 9.5" x 24.5"
- 43 lbs.

FLIGHT ZONE®

DENON PRIME 4 DJ CONTROLLER CASE

FRPRIME4
FRPRIME4BL

Standard
Black Label

Approx. Ext. Dim
- 33"W x 9.5"H x 24.5"D
- 43 lbs.

FLIGHT READY

DENON PRIME 4 DJ CONTROLLER CARRYING BAG

BMSLPRIME4
- Durable yet light weight

Approx. Ext. Dim
- 33" x 21" x 7.5"
- 8 lbs.

STREEMLINE

DENON DN-MC3000/6000 MK2

FRGSDNMC36000GT
FRGSDNMC36000BL

Standard
Black Label

Approx. Ext. Dim
- 23" x 9" x 16.75"
- 23 lbs.

FLIGHT READY

DENON DN-MC4000

FRDNMC4000
FRDNMC4000BL
- Low Profile

Standard
Black Label

Approx. Ext. Dim
- 23.75"x 6.5"x 17.25"
- 13 lbs

FLIGHT READY

DENON DN-MC4000

FRGSDNMC4000
FRGSDNMC4000BL
- Low Profile
- Fits Denon DN-MC4000

Standard
Black Label

Approx. Ext. Dim
- 24.75"x 7"x 17.25"
- 20 lbs

FLIGHT READY

DENON MC7000

FRGSMC7000

Standard

Approx. Ext. Dim
- 30.5" x 9.5" x 22.75"
- 40 lbs.

FLIGHT READY

DENON MC7000

FZGSDJ808W2
FZGSDJ808W2BL
- Fits Denon MC7000, Pioneer DDJ-RX/SX/SX2, Roland DJ-808
- 2U bottom rack

Standard
Black Label

Approx. Ext. Dim
- 32" x 11.5"x 22"
- 42 lbs.

FLIGHT ZONE®

DENON MC7000

FRMC7000
• Standard Case Design

Standard

Approx. Ext. Dim
• 29.5" x 9.5" x 22.5"
• 28 lbs.

FLIGHT READY

DENON MCX8000

CDNMCX8000
• Fits Denon MCX8000

CARPET

Approx. Ext. Dim
• 32"x 5.75"x 21.5"
• 20 lbs.

DENON MCX8000

FZDNMCX8000
FZDNMCX8000BL
• Low Profile

Standard
Black Label

Approx. Ext. Dim
• 31.75"x 7.75"x 22"
• 25 lbs..

FLIGHT ZONE®

DENON MCX8000

FZGSMCX8000W2
FZGSMCX8000W2BL
• Flight Zone™
• 2U Rack Spaces

Standard
Black Label

GS Series For Digital DJ's

*shown with optional pull-out shelve

Approx. Ext. Dim
• 34.25" x 2.25" x 22.5"
• 42 lbs.

FLIGHT ZONE®

N.I. INSTRUMENTS MASCHINE STUDIO

FZGSMASCHINES
FZGSMASCHINESBL

Standard
Black Label

GS Series For Digital DJ's

Approx. Ext. Dim
• 23" x 8.25" x 19"
• 23 lbs.

FLIGHT ZONE®

N.I. INSTRUMENTS TRAKTOR KONTROL S2 MK2

FZGSTKS2
FZGSTKS2BL

Standard
Black Label

GS Series For Digital DJ's

Approx. Ext. Dim
• 23.5" x 9" x 17"
• 21 lbs.

FLIGHT ZONE®

N.I. INSTRUMENTS TRAKTOR KONTROL S4 MK2/S5

FRTS4
FRTS4BL
• Standard Case Design

Standard
Black Label

Approx. Ext. Dim
• 22.625" x 7.25" x 19"
• 13 lbs.

FLIGHT READY

N.I. INSTRUMENTS TRAKTOR KONTROL S2 MK3

FRGSTKS2MK3
FRGSTKS2MK3BL
• Low Profile

Standard
Black Label

GS Series For Digital DJ's

Approx. Ext. Dim
• 24" x 7" x 16.75"
• 19 lbs.

FLIGHT READY

N.I. INSTRUMENTS TRAKTOR KONTROL S4 MK3

FZGSATKS4MK3
FZGSATKS4MK3BL
• Flight Zone™

Standard
Black Label

GSA

Approx. Ext. Dim
• 28.75" x 8.75" x 8.75"
• 21 lbs.

FLIGHT ZONE®

N.I. INSTRUMENTS TRAKTOR KONTROL S8

FZGSTKS8
FZGSTKS8BL

Standard
Black Label

GS Series For Digital DJ's

Approx. Ext. Dim
• 27.75" x 9" x 20"
• 25 lbs.

FLIGHT ZONE®

N.I. INSTRUMENTS TRAKTOR KONTROL S8

FZTKS8 — Standard
FZTKS8BL — Black Label
• Low Profile

Approx. Ext. Dim
• 26.75" x 6.5" x 20"
• 17 lbs.

FLIGHT ZONE®

N.I. INSTRUMENTS MASCHINE MK3

KMASCHINEMK3SIL — Standard
KMASCHINEMK3BLK — Black Krom

Approx. Ext. Dim
• 14"x 5.75"x 15.5"
• 4 lbs

KROM

N.I. INSTRUMENTS TRAKTOR KONTROL S2

BMSLTKS2MK3
• EVA Bag

Approx. Ext. Dim
• 22.5" x 14.5" x 5"
• 4 lbs.

STREEMLINE
A NEW STANDARD IN MOBILE PROTECTION

NUMARK MIXDECK/ MIXDECK QUAD

FZMIXDECK — Standard
• Standard Case Design

Approx. Ext. Dim
• 28.75" x 9.25" x 18.5"
• 25 lbs.

FLIGHT ZONE®

NUMARK MIXDECK / MIXDECK QUAD

FZGSMIXDECKGT — Standard
FZGSMIXDECKGTBL — Black Label
• Glide Tray™

GS Series For Digital DJs

Approx. Ext. Dim
• 30.5" x 11.5" x 18.75"
• 39 lbs.

FLIGHT ZONE®

NUMARK MIXDECK EXPRESS

FZMIXDECKEXBL — Black Label
• Standard Case Design

Approx. Ext. Dim
• 24.5" x 8" x 24.5"
• 19 lbs.

FLIGHT ZONE®

NUMARK MIXDECK EXPRESS

FZGSMIXDECKEX — Standard
FZGSMIXDECKEXBL — Black Label

GS Series For Digital DJs

Approx. Ext. Dim
• 24.5" x 8.75" x 18.25"
• 23 lbs.

FLIGHT ZONE®

NUMARK NS6II

FRNS6II — Standard
FRNS6IIBL — Black Label
• Low Profile

Approx. Ext. Dim
• 25.75" x 6.5" x 18.5"
• 15 lbs.

FLIGHT READY

NUMARK NS6II

FRGSNS6II — Standard
FRGSNS6IIBL — Black Label
• Low Profile

GS Series For Digital DJs

Approx. Ext. Dim
• 26.5"x 7" x 18.5"
• 20 lbs.

FLIGHT READY

NUMARK NS7 / NS7II / NS7III

FZGSNS7IIWGTBL — Black Label
• Bottom GT™
Glide Tray Shelf

Approx. Ext. Dim
• 36" x 11.25" x 22.5"
• 49 lbs.

FLIGHT ZONE®

NUMARK MIXTRACK 3 / PRO 3 / PLATINUM

FRMIXTRACK3
FRMIXTRACK3BL
• Low Profile

Standard
Black Label

Approx. Ext. Dim
• 24.75" x 6.5" x 14.5"
• 13 lbs.

FLIGHT READY

NUMARK MIXTRACK 3 / MIXTRACK PRO 3 / MIXTRACK PLATINUM

FRGSMIXTRACK3
FRGSMIXTRACK3BL
• Low Profile

Standard
Black Label

Approx. Ext. Dim
• 26.5" x 7" x 15"
• 18 lbs.

FLIGHT READY

NUMARK NV / NVII

FZNV
FZNVBL
• Low Profile

Standard
Black Label

Approx. Ext. Dim
• 24.75"x 6.5"x18"
• 14 lbs.

FLIGHT ZONE®

NUMARK PT01

KPT01BL
KPT01SIL

Silver
Black Krom

Approx. Ext. Dim
• 14"x 5.75"x 15.5"
• 4.6 lbs.

KROM

NUMARK PT01 WITH MIXER COMPARTMENT

KPT01SCBLK
KPT01SCSIL

Silver
Black Krom

Approx. Ext. Dim
• 24"x 5.75"x 16.5"
• 6 lbs.

KROM

NUMARK PT01 10" TURNTABLES MIXER COFFIN

K10PT01BLK
K10PT01SIL

Silver
Black Krom

Approx. Ext. Dim
• 38"x 5.75"x 19.25"
• 11 lbs.

KROM

NUMARK NV / NVII WITH GLIDE LAPTOP PLATFORM

FZGSNVBL
• Low Profile

Black Label

Approx. Ext. Dim
• 26" x 7.5" x 18.75"
• 20 lbs.

FLIGHT ZONE®

PIONEER DDJ-800 GLIDE LAPTOP PLATFORM WITH 1U RACK

FZGSPIDDJ8001
FZGSPIDDJ8001BL
• Removable 1U 19" Rack Mount Rails Below the Controller Space

Standard
Black Label

Approx. Ext. Dim
• 29.25"W x 9.5"H x 20.5"D
• 34 lbs.

FLIGHT ZONE®

PIONEER DDJ-800

FZPIXDJRR
FZPIXDJRRBL
• Low Profile

Standard
Black Label

Approx. Ext. Dim
• 27.75 x 7.5 x 19.75
• 22 lbs.

FLIGHT ZONE®

PIONEER XDJ-XZ

FZPIXDJXZ
FZPIXDJXZBL
• Low Profile

Standard
Black Label

Approx. Ext. Dim
• 27.75 x 7.5 x 19.75
• 22 lbs - 30 lbs

FLIGHT ZONE®

PIONEER DDJ-1000 WITH LED LIGHTING EFFECT

FFXGSDDJ1000WBL
- Special edition LED platform

Black Label

Approx. Ext. Dim
- 31.25" x 7.75" x 19.75"
- 24 lbs

FLIGHT FX™

PIONEER DDJ-1000

FZDDJ1000
FZDDJ1000BL
- Low Profile

Standard
Black Label

Approx. Ext. Dim
- 31.25" x 7.75" x 19.75"
- 24 lbs

FLIGHT ZONE®

PIONEER DDJ-1000 W/1U RACK

FZGSDDJ1000W1
FZGSDDJ1000W1BL

Standard
Black Label

Approx. Ext. Dim
- 33.75" x 11.75"x 21.5"
- 43 lbs

FLIGHT ZONE®

PIONEER DDJ-1000

FZGSDDJ1000WGTB
- Bottom GT™ Glide Tray Shelf

Black Label

Approx. Ext. Dim
- 36" x 11.25"x 22.5"
- 49 lbs

FLIGHT ZONE®

PIONEER DDJ-1000 / DDJ-1000SRT

FZGSDDJ1000W2BL
- Bottom 2U Rack Space

Black Label

Approx. Ext. Dim
- 32.5" x 20.5"x 11"
- 43 lbs

FLIGHT ZONE®

PIONEER DDJ-1000 EVA MOLDED CARRYING BAG

BMSLDDJ1000

Approx. Ext. Dim
- 30.25" x 18.25" x 5"
- 5 lbs

STREEMLINE

PIONEER DDJ-RB

FRPIDDJRB
FRPIDDJRBBL
- Low Profile

Standard
Black Label

Approx. Ext. Dim
- 22.5" x 6.5" x 16.5"
- 13 lbs.

FLIGHT READY

PIONEER DDJ-RR/SR

FRPIDDJRR
FRPIDDJRRBL
- Low Profile
- Fits Pioneer DDJ-RR/SR

Standard
Black Label

Approx. Ext. Dim
- 25.25" x 6.5" x 18.5"
- 15 lbs.

FLIGHT READY

PIONEER DDJ-RB

FRPIDDJSR2
FRPIDDJSR2BL
- Low Profile

Standard
Black Label

Approx. Ext. Dim
- 22.5" x 6.5" x 16.5"
- 13 lbs.

FLIGHT READY

PIONEER DDJ-RX / SX / SX2

FRPIDDJRX

Standard

Approx. Ext. Dim
- 30.75" x 9.5" x 19"
- 27 lbs.

FLIGHT READY

PIONEER DDJ-RB

FRGSPIDDJRB
FRGSPIDDJRBBL
- Low Profile

Standard
Black Label

Approx. Ext. Dim
- 23.75" x 7"x 16.5"
- 17 lbs.

FLIGHT READY

PIONEER DDJ-RR/SR

FRGSPIDDJRR
FRGSPIDDJRRBL
- Low Profile

Standard
Black Label

Approx. Ext. Dim
- 26.5" x 7" x 18.5"
- 20 lbs.

FLIGHT READY

PIONEER DDJ-RX/SX2

FZPIDDJSX
FZPIDDJSXBL
• Also fits Pioneer DDJ-S1/T1

Standard
Black Label

Approx. Ext. Dim
• 31.25" x 8.75" x 18.75"
• 24 lbs.

FLIGHT ZONE®

PIONEER DDJ-RX/SX2

FZGSPIDDJSX
FZGSPIDDJSXBL
• 1U rack space
• Also fits Pioneer DDJ-S1/T1

Standard
Black Label

Approx. Ext. Dim
• 32" x 8.75" x 18.75"
• 34 lbs.

FLIGHT ZONE®

PIONEER DDJ-RX/SX2

FZGSPIDDJSX2
FZGSPIDDJSX2BL
• 1U rack space

Standard
Black Label

Approx. Ext. Dim
• 31" x 9.5" x 18.5"
• 29 lbs.

FLIGHT ZONE®

PIONEER DDJ-RZ / SZ2

FRGSPIDDJRZW

Standard

Approx. Ext. Dim
• 38.25" x 9.5" x 22.75"
• 45 lbs.

FLIGHT READY

PIONEER DDJ-RZ / SZ/ SZ2

FRPIDDJRZW
• also fits Numark NS7/NS7II/NS7III

Standard
Black Label

Approx. Ext. Dim
• 37.75" x 9.5" x 22"
• 36 lbs.

FLIGHT READY

PIONEER DDJ-RZ/SZ2 W/THREE 1U RACKS

FZGSPIDDJSZWR
• three 1U rack spaces

Standard

Approx. Ext. Dim
• 43" x 22.25" x 12.25"
• 55 lbs.

FLIGHT ZONE®

PIONEER DDJ-RZ/SZ/SZ2

FZPIDDJRZW
FZPIDDJRZWBL
• also fits Numark NS7/ NS7II /NS7III

Standard
Black Label

Approx. Ext. Dim
• 37.5" x 9" x 22"
• 33 lbs.

FLIGHT ZONE®

PIONEER DDJ-RZ/SZ2

FZGSPIDDJSZGT
FZGSPIDDJSZGTBL
• Glide Tray

Standard
Black Label

Approx. Ext. Dim
• 38.75"x 10" x 22"
• 49 lbs.

FLIGHT ZONE®

PIONEER DDJ-RZX

FZPIDDJRZXW
FZPIDDJRZXWBL
• Low Profile

Standard
Black Label

Approx. Ext. Dim
• 41.25" x 8.75" x 28"
• 39 lbs.

FLIGHT ZONE®

PIONEER DDJ-RZX

FZGSADDJRZXW
FZGSADDJRZXWBL
• Low Profile

Standard
Black Label

Approx. Ext. Dim
• 44.5"x 9.5"x 28"
• 52 lbs

FLIGHT ZONE®

PIONEER DDJ-RZ/SZ/SZ2 WITH WHEELS

FZGSADDJSZW
FZGSADDJSZWBL

Standard
Black Label

Approx. Ext. Dim
- 41.5"x 10.5"x 22"
- 49 lbs

FLIGHT ZONE®

PIONEER DDJ-SB2

FRPIDDJSB
- Also fits Numark Mixtrack II / Pro II

Standard

Approx. Ext. Dim
- 24.25" x 7" x 15.25"
- 14 lbs.

FLIGHT READY

PIONEER DDJ-SB/SB2

FRGSPIDDJSBBL
- Also fits Numark Mixtrack II / Pro II

Black Label

Approx. Ext. Dim
- 25.5" x 8" x 15.25"
- 19 lbs.

FLIGHT READY

PIONEER DDJ-SR

CPIDDJSR
- Standard Case Design

CARPET

Approx. Ext. Dim
- 25" x 6.5" x 17.5"
- 15 lbs.

PIONEER DDJ-SR

FRPIDDJSRBL
- Standard Case Design

Black Label

Approx. Ext. Dim
- 25.25" x 8.75" x 17.5"
- 18 lbs.

FLIGHT READY

PIONEER DDJ-SR

FZGSPIDDJSR
FZGSPIDDJSRBL

Standard
Black Label

Approx. Ext. Dim
- 27" x 8.75" x 17.5"
- 24 lbs.

FLIGHT ZONE®

PIONEER XDJ-RR

FZPIXDJRR
FZPIXDJRRBL
- Low Profile
- All Black Anodized and Powder Coated Hardware

Standard
Black Label

Approx. Ext. Dim
- 27.75" x 7.5" x 19.75"
- 22 lbs.

FLIGHT ZONE®

PIONEER DDJ-800

FZPIDDJ800
FZPIDDJ800BL
- Low Profile
- All Black Anodized and Powder Coated Hardware available

Standard
Black Label

Approx. Ext. Dim
- 27.75" x 7.5" x 19.75"
- 22 lbs.

FLIGHT ZONE®

PIONEER DDJ-SR2

FRPIDDJSR2
FRPIDDJSR2BL
• fits Pioneer DDJ-SR

Standard
Black Label

Approx. Ext. Dim
• 25.25" x 8.75" x 17.5"
• 18 lbs.

FLIGHT READY

PIONEER DDJ-WEGO4

FRWEGO
FRWEGOBL
• Also fits Pioneer DDJ-WEGO/WEGO2/ WEGO3 and similar size gear 10" to 15"W x 10.25"D, up to 3" H

Standard
Black Label

Approx. Ext. Dim
• 17" x 6.75" x 12.25"
• 8 lbs.

FLIGHT READY

PIONEER DJM-2000/NXS

FZDJM2000
FZDJM2000BL

Standard
Black Label

Approx. Ext. Dim
• 22" x 9" x 22"
• 26 lbs.

FLIGHT ZONE®

PIONEER DJM-2000/NXS

FZGSDJM2000

Standard

Approx. Ext. Dim
• 22" x 9" x 22"
• 26 lbs.

FLIGHT ZONE®

PIONEER XDJ-R1

FZGSPIXDJR1BL

Black Label

Approx. Ext. Dim
• 30.75" x 10" x 20.5"
• 36 lbs.

FLIGHT ZONE®

PIONEER XDJ-R1

FZPIXDJR1BL

Black Label

Approx. Ext. Dim
• 28.75" x 9.25" x 18.5"
• 25 lbs.

FLIGHT ZONE®

PIONEER XDJ-R1

FZGSPIXDJR1GT
• Glide Tray

Standard

Approx. Ext. Dim
• 30.5"x11.5"x 18.75"
• 39 lbs.

FLIGHT ZONE®

PIONEER XDJ-RR

FZXDJRR
FZXDJRRBL

Standard
Black Label

Approx. Ext. Dim
• 29.5" x 7.75" x 21.25"
• 22 lbs

FLIGHT ZONE®

PIONEER XDJ-RR

FZGSAXDJRR
FZGSAXDJRRBL

GSA

Standard
Black Label

Approx. Ext. Dim
• 32.25"x8.75"x22.25"
• 33 lbs

FLIGHT ZONE®

PIONEER XDJ-RR WITH 1U RACK

FZGSPIXDJRR1
FZGSPIXDJRR1BL

Standard
Black Label

Approx. Ext. Dim
• 29.25"x 9.5"x 20.5"
• 34 lbs

FLIGHT ZONE®

PIONEER XDJ-RX

FZPIXDJRX
FZPIXDJRXBL
• Low Profile

Standard
Black Label

Approx. Ext. Dim
• 31.75" x 7.5" x 20.75"
• 22 lbs.

FLIGHT ZONE®

PIONEER DJS-1000 SAMPLER

VUDJS1000

Approx. Ext. Dim
• 20.5" x 7.75"x 16.5"
• 11 lbs.

VULCAN SERIES

PIONEER CDJ-850, 900NXS, 2000NXS2, XDJ-1000MK2

FZ12CDJW
FZ12CDJWBL

- 12" format mixer, (2) large format CD/Digital Media Players

Recessed Roller for easy transport

Standard

Black Label

Approx. Ext. Dim
- 43" x 9.5" x 19"
- 40 lbs

FLIGHT ZONE®

PIONEER CDJ-850, 900NXS, 2000NXS2, XDJ-1000MK2

FZ12CDJWXD
FZ12CDJWXDBL

- Extra Deep 12" format mixer, (2) large format CD/Digital Media Players

Width adjusted foam included

Standard

Black Label

Approx. Ext. Dim
- 45"x 9"x 21.25"
- 42 lbs

FLIGHT ZONE®

RANE TWELVE TURNTABLE CASE

FZRANE12
FZRANE12BL

Standard

Black Label

Approx. Ext. Dim
- 17"x 8.25"x 22.5"
- 19 lbs

FLIGHT ZONE®

RANE SIXTY-FOUR SIXTY-EIGHT MIXER CASE WITH LAPTOP PLATFORM

FZGS12RANE64
FZGS12RANE64BL

Standard

Black Label

Approx. Ext. Dim
- 17"x 8.25"x 22.5"
- 19 lbs

FLIGHT ZONE®

RANE SEVENTY-TWO MIXER CASE

FZRANE72
FZRANE72BL

Standard

Black Label

Approx. Ext. Dim
- 14.5"Wx 8.25"x 22.5"
- 17 lbs

FLIGHT ZONE®

RANE SEVENTY-TWO / V

FZ1RA1272W
FZ1RA1272WBL

Standard

Black Label

Approx. Ext. Dim
- 30.25" x 9" x 22.25"
- 31 lbs

FLIGHT ZONE®

RANE SEVENTY-TWO / TWELVE COFFIN

FZGS1RA1272W
FZGS1RA1272WBL

Standard

Black Label

Approx. Ext. Dim
- 32" x 10" x 22.25"
- 42 lbs

FLIGHT ZONE®

RANE SEVENTY-TWO / TWELVE COFFIN

FZRANE1272W
FZRANE1272WBL

Standard

Black Label

Approx. Ext. Dim
- 45.25" x 8.75" x 22.5"
- 42 lbs

FLIGHT ZONE®

RANE SEVENTY-TWO TWELVE COFFIN

FZGSRANE1272W
FZGSRANE1272WBL

- Low Profile
- Glide Style™

Standard

Black Label

Approx. Ext. Dim
- 46.5" x 10" x 22.5"
- 47 lbs

FLIGHT ZONE®

RANE SEVENTY-TWO TWELVE COFFIN

FZGSPRAA1272W
FZGSPRAA1272WBL

- Low Profile
- Glide Style™

Standard

Black Label

Approx. Ext. Dim
- 46.5" x 10" x 22.5"
- 47 lbs

FLIGHT ZONE®

RANE TWELVE PRO TOUR EVA MOLDED CARRYING BAG
BMSRANE12TOUR

- 18"x 6.25"x 21.5"
- 6 lbs.

STREEMLINE

RANE SEVENTY-TWO / PIONEER DJM-S9 EVA MOLDED PRO TOUR CARRYING BAG
BMSRANE72TOUR

- 14.75"x 6.25" x 22.5"
- 5 lbs.

STREEMLINE

RANE TWELVE WATER PROOF
VURANE72

- 20.5" x 7.75" x 16.5"
- 11 lbs

VULCAN SERIES

RELOOP TERMINAL MIX 8
FZTERMIX8
FZTERMIX8BL

Standard
Black Label

Approx. Ext. Dim
- 23.5" x 8.5" x 19.75"
- 21 lbs.

FLIGHT ZONE®

RELOOP TERMINAL MIX 8
FZGSTERMIX4
FZGSTERMIX4BL

Standard
Black Label

Approx. Ext. Dim
- 24.5" x 8.75" x 18.25"
- 23 lbs.

FLIGHT ZONE®

ROLAND DJ-202
FRGSDJ202
- Reverse Lid Low Profile Design

Standard

Approx. Ext. Dim
- 23.75"x 6.75"x 17.25"
- 18 lbs.

FLIGHT READY

ROLAND DJ-707M
FRGSDJ707M
FRGSDJ707MBL
- Low Profile Design
- Patented Glide Laptop Platform

Standard
Black Label

Approx. Ext. Dim
- 24.75"x 17.25"x 7"
- 20 lbs.

FLIGHT READY

ROLAND DJ-707M MOLDED BAG
BMSLRODJ707M

Approx. Ext. Dim
- 22.5"x 5"x 14.5"
- 4 lbs.

STREEMLINE

ROLAND DJ-808
FRRODJ808XD

Standard

Approx. Ext. Dim
30.5" x 9.75" x 18.75"
- 28 lbs.

FLIGHT READY

ROLAND DJ-808
FRGSRODJ808XD

Standard

Approx. Ext. Dim
- 30.5" x 9.5" x 22.75"
- 37 lbs.

FLIGHT READY

ROLAND DJ-808
FZDJ808
FZDJ808BL
- Also fits Denon MC7000, Pioneer DDJ-RX/SX/SX2,

Standard
Black Label

Approx. Ext. Dim
- 29.5"x 7.75" x 21.5"
- 22 lbs.

FLIGHT ZONE®

ROLAND DJ-808
FZGSDJ808W2
FZGSDJ808W2BL
- **2U rack** space
- Also fits Denon MC7000, Pioneer DDJ-RX/SX/SX2,

Standard
Black Label

Approx. Ext. Dim
- 32" x 11.5" x 22"
- 42 lbs.

FLIGHT ZONE®

N.I. TRAKTOR KONTROL S2 MK3

BMSLTKS2MK3

Standard

Black Label

Approx. Ext. Dim
- 22.5"x 14.5"x 5"
- 4 lbs

STREAMLINE

N.I. TRAKTOR KONTROL S4 MK3

FZGSATKS4MK3

FZGSATKS4MK3BL

- Angled Glide Platform

GSA

Standard

Black Label

Approx. Ext. Dim
- 28.75"x 8.75"x 18.5"
- 21 lbs

FLIGHT ZONE®

N.I. TRAKTOR KONTROL S2 /S2 MK2

FZGSTKS2

FZGSTKS2BL

GS Series For Digital DJ's

Standard

Black Label

Approx. Ext. Dim
- 23.5" x 9" x 17"
- 20 lbs.

FLIGHT ZONE®

N.I. TRAKTOR KONTROL S4/S4 MK2/S5

FZGSTKS4

FZGSTKS4BL

GS Series For Digital DJ's

Standard

Black Label

Approx. Ext. Dim
- 24.5" x 8.75" x 18.25"
- 23 lbs.

FLIGHT ZONE®

N.I. TRAKTOR KONTROL S8

FZGSTKS8

FZGSTK8BL

GS Series For Digital DJ's

Standard

Black Label

Approx. Ext. Dim
- 27.75" x 9" x 20"
- 25 lbs.

FLIGHT ZONE®

N.I. TRAKTOR KONTROL S4 / S4 MK2/ S5

FRTS4

Standard

Approx. Ext. Dim
- 22.625" x 7.25" x 19"
- 13 lbs.

FLIGHT READY

N.I. TRAKTOR KONTROL S8

FZTKS8

FZTKS8BL

- Low Profile™

Standard

Black Label

Approx. Ext. Dim
- 26.75" x 6.5" x 20"
- 17 lbs.

FLIGHT ZONE®

12" MIXER CDJ/COFFINS WITH WHEEL

FZGS12CDJW

FZGS12CDJWBL

- 12" format mixer, (2) large format CD/Digital media players

GS Series For Digital DJ's

Standard

Black Label

Approx. Ext. Dim
- 42.75" x 12.25" x 19.5"
- 51 lbs

FLIGHT ZONE®

12" MIXER CDJ/COFFINS W/WHEELS

FZGSL12CDJWR

FZGSL12CDJWRBL

- 12" format mixer, (2) large format tabletop players

GS Series For Digital DJ's

Standard

Black Label

Approx. Ext. Dim
- 44.5" x .75" x 20.75"
- 43 lbs

FLIGHT ZONE®

12" MIXER CDJ/COFFINS

FZGSL12CDJW

FZGSL12CDJWBL

- 12" format mixer,(2) large format CD/Digital media players

GS Series For Digital DJ's

Standard

Black Label

Approx. Ext. Dim
- 44.5" x 8.75" x 20.5"
- 43 lbs

FLIGHT ZONE®

10" MIXER CDJ/COFFIN
FR10CDJWE

Standard

Approx. Ext. Dim
- 41"x 9.5" x 19.5"
- 34 lbs

FLIGHT READY

10" MIXER CDI/COFFIN
FR10CDiWE

Standard

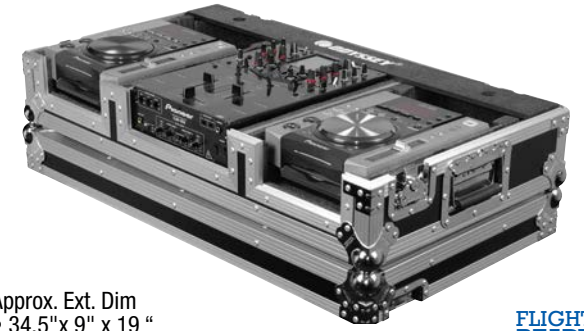

Approx. Ext. Dim
- 34.5"x 9" x 19 "
- 37 lbs

FLIGHT READY

10" MIXER CDJ/COFFIN
FZ10CDJWXD
FZ10CDJWXDBL
- Extra Deep

Standard

Black Label

Approx. Ext. Dim
- 42.75"x 8.75"x 21.25"
- 39 lbs.

FLIGHT ZONE®

10" MIXER CDJ/COFFIN
FZ10CDJWXDBL
FZ10CDJWXDJWXD
- Extra Deep

Standard

Black Label

Approx. Ext. Dim
- 42.75"x 8.75"x 21.25"
- 39 lbs

FLIGHT ZONE®

12" MIXER CDJ/COFFINS
FZGSP12CDJW
FZGSP12CDJWBL
- 12" format mixer, (2) Full Size format CD/Digital Media players

Standard

Black Label

Approx. Ext. Dim
- 45" x 10.63" x 24.25"
- 52 lbs

FLIGHT ZONE®

12" MIXER CDJ/COFFIN
FR12CDJWE

Standard

Approx. Ext. Dim
- 43"x 9.5" x 19"
- 38 lbs

FLIGHT READY

12" MIXER CDJ/COFFIN
FR12CDiWE
- 12" format mixer, (2) large format CD/Digital media players

Standard

Approx. Ext. Dim
- 36.75"x 9" x 19.25"
- 39 lbs

FLIGHT READY

12" MIXER CDI/COFFIN
FZ12CDiW

Standard

Approx. Ext. Dim
- 36.5"x 9" x 19"
- 39 lbs

FLIGHT ZONE®

19" MIXER CDI/COFFIN
FZ19CDiW

Standard

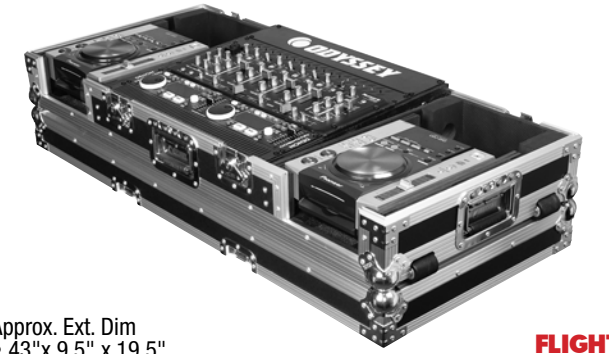

Approx. Ext. Dim
- 43"x 9.5" x 19.5"
- 43 lbs

FLIGHT ZONE®

10" MIXER BATTLE STYLE DJ COFFINS

FZBM10W
FZBM10WBL

- 10" format mixer, (2) 1200 style turntables in Battle Position

Standard
Black Label

Approx. Ext. Dim
- 47"x 9"x 22.5"
- 53 lbs

FLIGHT ZONE®

10" MIXER BATTLE STYLE COFFINS

FZGSLBM10WR
FZGSLBM10WRBL

- 10" format mixer, (2) 1200 turntables in Battle Mode

Standard
Black Label

- 46"x 9"x 23.5"
- 53 lbs

FLIGHT ZONE®

10" MIXER BATTLE STYLE DJ COFFINS

FZGSPBM10W
FZGSPBM10WBL

- 10" format mixer, (2) turntables in Battle Position

Standard
Black Label

Approx. Ext. Dim
- 47.25"x 10.5"x 24.25"
- 56 lbs

FLIGHT ZONE®

10" MIXER TURNTABLE DJ COFFINS

FZGSPDJ10W

- 10" format mixer, (2) turntables in Standard Position

Standard

Approx. Ext. Dim
- 54.5"x 10.5"x 21"
- 66 lbs

FLIGHT ZONE®

12" MIXER BATTLE STYLE DJ COFFIN

FZBM12W
FZBM12WBL

- 12" format mixer, (2) 1200 style turntables in Battle Position

Standard
Black Label

Approx. Ext. Dim
- 49"x 9"x 22.5"
- 56 lbs

FLIGHT ZONE®

12" MIXER BATTLE STYLE DJ COFFIN

FZGSLBM12WR
FZGSLBM12WRBL

- 12" format mixer, (2) 1200 turntables in Battle Mode

Standard
Black Label

- 48"x 9"x 23.75"
- 55 lbs

FLIGHT ZONE®

12" MIXER BATTLE STYLE DJ COFFINS

FZGSPBM12W
FZGSPBM12WBL

- 12" format mixer, (2) turntables in Battle Position

Standard
Black Label

- 49.5"x 10.5"x 24.25"
- 58 lbs

FLIGHT ZONE®

12" MIXER TURNTABLE DJ COFFIN

FZGSPDJ12W

- 12"mixer, (2) turntables in Standard Position

Standard

Approx. Ext. Dim
- 56.5"x 10.375"x 21"
- 65 lbs

FLIGHT ZONE®

19" MIXER, TURNTABLE DJ COFFIN

FZGSPDJ19W

- 19" mixer, (2) turntables in Standard Position

Standard

Approx. Ext. Dim
- 63.25"x 10.5"x 21"
- 67 lbs

FLIGHT ZONE®

10" MIXER TURNTABLE DJ COFFIN

FZDJ10W

- 10" mixer, (2) turntables in Standard Position

Standard

Approx. Ext. Dim
- 46"x 8"x 22"
- 53 lbs

FLIGHT ZONE®

12" MIXER TURNTABLE DJ COFFIN

FZDJ12W

- 12" format mixer, (2) turntables in Standard Position

Standard

Black Label

Approx. Ext. Dim
- 46"x 8"x 22"
- 55 lbs

FLIGHT ZONE®

19" MIXER TURNTABLE DJ COFFIN

FZDJ19W

- 19"mixer, (2) turntables in Standard Position

Standard

Approx. Ext. Dim
- 61"x 10"x 17.5"
- 44 lbs

FLIGHT ZONE®

10" MIXER CASE

FZ10MIX

FZ10MIXBL

- Pro Duty

Standard

Black Label

Approx. Ext. Dim
- 14.25" x 9.5" x 21.375"
- 20 lbs

FLIGHT ZONE®

10" MIXER CASE

FZGS10MX1XD

FZGS10MX1XDBL

- Low Profile

GS Series For Digital DJs

Standard

Black Label

Approx. Ext. Dim
- 15.25" x 8.25" x 21.5"
- 22 lbs

FLIGHT ZONE®

10" MIXER CASE WITH EXTRA DEEP REAR CABLE SPACE

FZ10MIXXD

FZ10MIXXDBL

- 10" format
- Pro Duty

Standard

Black Label

Approx. Ext. Dim
- 21.5" x 9" x 16"
- 20 lbs

FLIGHT ZONE®

10" MIXER CASE

FR10MIXE

- Standard Duty
- 10" format

Standard

Approx. Ext. Dim
- 12.75" x 9.375" x 21"
- 11 lbs

FLIGHT READY

10" MIXER CASE WITH LAPTOP PLATFORM

FZGS10MX1

FZGS10MX1BL

- 10" format
- Pro Duty

GS Series For Digital DJs

Standard

Black Label

Approx. Ext. Dim
- 15.5" x 8.5" x 20.25"
- 21 lbs

FLIGHT ZONE®

12" MIXER CASE

FZ12MIX

FZ12MIXBL

- 12" format
- Pro Duty

Standard

Black Label

- 15.5" x 8.5" x 20.25"
- 21 lbs

FLIGHT ZONE®

12" MIXER CASE DIAMOND FINISH

FZ12MIXDIA

- Diamond Plated
- 12" format
- Pro Duty

Diamond Plate

- 21.5" x 9" x 16"
- 20 lbs

FLIGHT ZONE®

12" MIXER CASE

FZ12MIXXD

- 12" format
- Pro Duty

Standard

Black Label

- 16.5" x 8.25" x 22.25"
- 19 lbs

FLIGHT ZONE®

12" MIXER CASE

FR12MIXE

- 12" format
- Standard Duty

Standard

Approx. Ext. Dim

- 16.5" x 8.25" x 22.25"
- 19 lbs

FLIGHT READY

12" MIXER CASE

FFX12MIXXDBL

- Extra deep rear cable space

Embedded into the case wall is a color changing multi-mode LED panel that runs across the front of the case.

Black Label

Approx. Ext. Dim

- 16.5" x 8.25" x 23.5"
- 22 lbs

FLIGHT FX™

12" MIXER CASE

FZGS12MX1

FZGS12MX1BL

- Low Profile

Standard

Black Label

Approx. Ext. Dim

- 17" x 8.25" x 20"
- 21 lbs

FLIGHT ZONE®

12" MIXER CASE

FZGS12MX1XD

FZGS12MX1XDBL

- Low Profile

Standard

Black Label

Approx. Ext. Dim

- 17.75" x 8.25" x 23"
- 25 lbs

FLIGHT ZONE®

12" DJ MIXER LED CASE

FFXGS12MX1XDBL

- Flight FX™
- Low Profile

Black Label

Embedded into the case wall is a color changing multi-mode LED panel that runs across the front of the case.

Approx. Ext. Dim

- 17.75" x 8.25"x 23.5"D
- 25 lbs.

FLIGHT FX™

10u 19" RACK MOUNT CASE

FZ19MIX

- 10 U Rack Spaces

Standard

Black Label

Approx. Ext. Dim

- 21.5" x 10.5" x 20"
- 23.8 lbs

FLIGHT ZONE®

10u RACK MOUNT CASE

FZGS8CDMIX

- 10 U Rack Spaces

Standard

Approx. Ext. Dim

- 21.5" x 10.5" x 20"
- 23.8 lbs

FLIGHT ZONE®

CDJ CASE 9.75"x2.5"x2.5"(int.) MEDIUM - CDJ/DIGITAL MEDIA PLAYER CASE

Standard

FRCDIE

- Medium format CD/Digital media player

Approx. Ext. Dim
- 11.75" x 9" x 18.5"
- 10 lbs

FLIGHT READY

CDJ CASE 12.75"x3"x15.25"(int) LARGE - CD/DIGITAL MEDIA PLAYER CASE

Standard

Black Label

FZCDJ
FZCDJBL

- Large format CD/Digital media player

Approx. Ext. Dim
- 15.5" x 8.75" x 20.5"
- 17 lbs

FLIGHT ZONE®

CDJ CASE 12.75"x6"x14"(int) LARGE - CDJ/DIGITAL MEDIA PLAYER CASE

Standard

FRCDJE

- Large format CD/Digital media player

Approx. Ext. Dim
- 14.75" x 8.25" x 19"
- 17 lbs

FLIGHT READY

TECHNICS 1200 STYLE HEAVY DUTY TURNTABLE CASE

Standard

Black Label

White/ Silver

FZ1200
FZ1200BL
FZ1200WT

- 1200 Style Turntable

Approx. Ext. Dim
- 21" x 9.5" x 21.5"
- 20 lbs

FLIGHT ZONE®

TECHNICS 1200 STYLE STANDARD TURNTABLE CASES

Standard

FR1200E

- Holds Technics 1200 Style DJ Turntable

Approx. Ext. Dim
- 20.25" x 9.25" x 17.25"
- 17 lbs

FLIGHT READY

TECHNICS 1200 STYLE DIAMOND PURE TURNTABLE CASE

Diamond Plate

FTTDIA

- Diamond Plated
- Holds Technics 1200 Style DJ Turntable

Approx. Ext. Dim
- 22" x 9" x 18"
- 21 lbs

TECHNICS 1200 STYLE LIGHT WEIGHT TURNTABLE CASE

Standard

Blue/ Silver

Red/ Silver

FTTXBLK / FTTXBLUE / FTTXRED

- Holds Technics 1200 Style DJ Turntable

Approx. Ext. Dim
- 22" x 9.25" x 17.5
- 20 lbs

10" MIXER DESIGNER SERIES CASES

FR10MIXBKRED

Blue/Black

Red/Black

Approx. Ext. Dim
- 21" x 9.375" x 12.75"
- 11 lbs

FLIGHT READY

12" MIXER DESIGNER SERIES CASES

FR12MIXBKBLUXD
FR12MIXBKRED
- 12" format mixer

Blue/Black

Red/Black

Approx. Ext. Dim
- 14.5" x 8.75" x 20.5"
- 13 lbs

FLIGHT READY

12" MIXER CDJ/DESIGNER SERIES CASES

FRCDJBKBLUE
FRCDJBKRED
- Standard Duty

Blue/Black

Red/Black

Approx. Ext. Dim
- 15" x 9.5" x 20"
- 13 lbs

FLIGHT READY

1200 STYLE TURNTABLE DESIGNER DJ CASES

FR1200BKBLUE
FR1200BKRED

Blue/Black

Red/Black

Approx. Ext. Dim
- 20.25" x 9.25" x 17.25"
- 13 lbs

FLIGHT READY

LED CDJ/CASES

FFXCDJBL

Black/ Black

Approx. Ext. Dim
- 21.5"x 8.5" x 15.25"
- 18 lbs

FLIGHT FX

LED CDJ/CASES

FFX2RCDJBL
- Right Side Dual LED Panel Case

Black/ Black

Approx. Ext. Dim
- 21.5"x 8.5" x 15.25"
- 18 lbs

FLIGHT FX2
2 LED panel series

LED 10" MIXER DJ CASES

FFX10MIXBL
- LED Panel Effects

Black/ Black

Approx. Ext. Dim
- 13.75" x 9.5"x 22"
- 19 lbs

FLIGHT FX

LED 10" MIXER, CDJ DJ COFFINS

FFX10CDJWBL
- LED Panel Effects

Black/ Black

Approx. Ext. Dim
- 42" x 9" x 21.63"
- 42 lbs

FLIGHT FX

LED 12" MIXER, GLIDE STYLE CDJ/DJ COFFIN

FFXGSL12CDJWRBL
- LED Panel Effects

Black/ Black

GS Series For Digital DJs

Approx. Ext. Dim
- 44" x 8.75" x 20.5"
- 43 lbs.

FLIGHT FX

LED 12" MIXERS CASES

FFX12MIXBL

- Fits most 12" format mixers

Black Label

Approx. Ext. Dim
- 15.75" x 9.5"x 22"
- 20 lbs

LED 12" MIXER CASES

FFXGS12MX1BL

- Fits most 12" rack mount mixers

Black Label

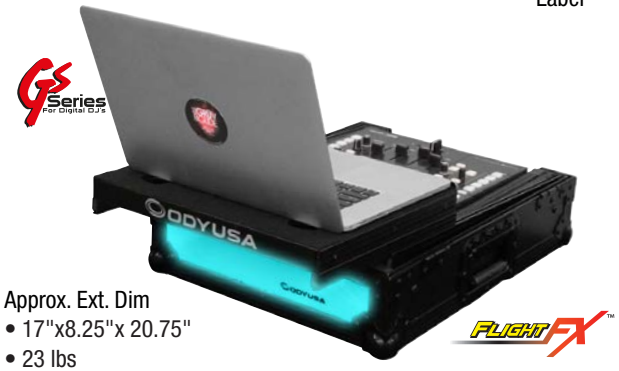

Approx. Ext. Dim
- 17"x8.25"x 20.75"
- 23 lbs

LED 19" RACK MOUNT MIXERS CASES

FFXGS10BL

- (10U Space)

Black Label

Approx. Ext. Dim
- 22"x 12.5"x 20.5
- 33 lbs

LED TECHNICS 1200 STYLE TURNTABLE CASES BATTLE POSITION

FFXBM1200BL

- Technics 1200 Style Turntable in Battle Position

Black Label

Approx. Ext. Dim
- 17.75"x 9"x 21"
- 18 lb

LED TECHNICS 1200 STYLE TURNTABLE CASES

FFX2LBM1200BL

- Technics 1200 Style in Battle (left) standard (right) Position

Black Label

Shown with optional ATT2 truss table

Approx. Ext. Dim
- 17.75"x 9"x 21"
- 18 lbs

2 LED panel series

LED TECHNICS 1200 STYLE TURNTABLE CASES

FFX2RBM1200BL

- Technics 1200 Style in Battle (right) standard (left) Position

Black Label

Approx. Ext. Dim
- 17.75"x 9"x 21"
- 18 lbs

2 LED panel series

LED TECHNICS 1200 STYLE TURNTABLE CASES STANDARD POSITION

FFXDJ1200BL

- Technics 1200 Style Turntable in Standard Position

Black Label

Approx. Ext. Dim
- 21"x9"x 17.75"
- 18 lbs

LED 10" MIXER, 2 TURNTABLES BATTLE MODE DJ COFFIN

FFXBM10WBL

- LED Panel Effects

Black Label

Approx. Ext. Dim
- 46" x 9" x 24.5"
- 46 lbs.

LED 12" MIXER, 2 TURNTABLE MODE DJ COFFIN BATTLE

FFXGSLBM12WBL

- LED Panel Effects

Black Label

Approx. Ext. Dim
- 48.25" x 9" x 24.5"
- 56 lbs.

20"w x13"d ADJUSTABLE FOAM INTERIOR CASE HOLDS MOST SMALL TO MEDIUM SIZE DJ CONTROLLERS
FRDJCS

Standard

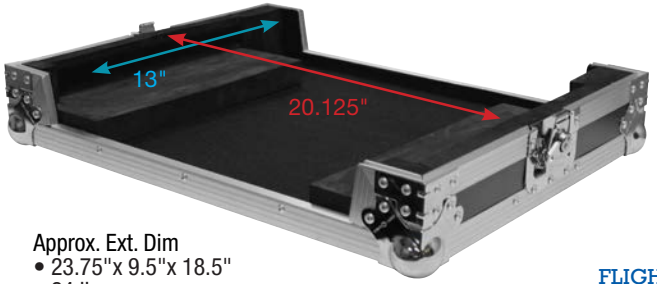

Approx. Ext. Dim
- 23.75"x 9.5"x 18.5"
- 24 lbs.

FLIGHT READY

24"w x13"d ADJUSTABLE FOAM INTERIOR CASE HOLDS MOST MEDIUM TO LARGE SIZE DJ CONTROLLERS
FRDJCM

Standard

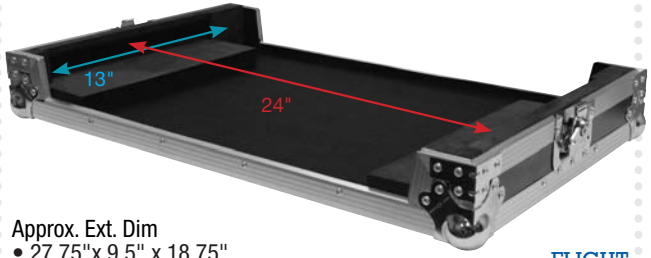

Approx. Ext. Dim
- 27.75"x 9.5" x 18.75"
- 26 lbs.

FLIGHT READY

26.75"w x13.5"d ADJUSTABLE FOAM INTERIOR CASE HOLDS MOST LARGE SIZE DJ CONTROLLERS
FRDJCL

Standard

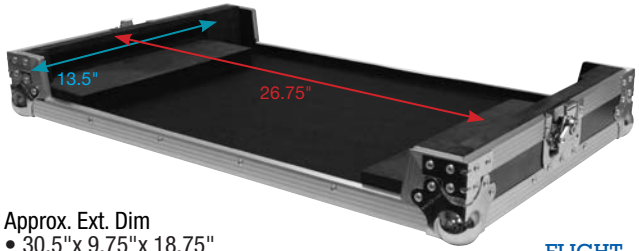

Approx. Ext. Dim
- 30.5"x 9.75"x 18.75"
- 28 lbs.

FLIGHT READY

20"w x13"d ADJUSTABLE FOAM INTERIOR CASE WITH LAPTOP PLATFORM HOLDS MOST SMALL TO MEDIUM SIZE DJ CONTROLLERS
FRGSDJCS
- GLIDE STYLE LAPTOP PLATFORM

Standard

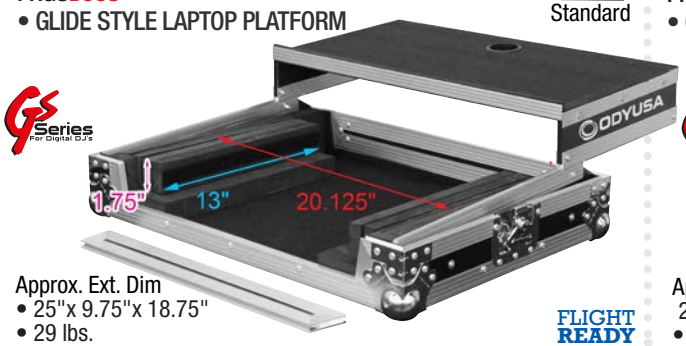

Approx. Ext. Dim
- 25"x 9.75"x 18.75"
- 29 lbs.

FLIGHT READY

24"w x13"d ADJUSTABLE FOAM INTERIOR CASE WITH LAPTOP PLATFORM HOLDS MOST MEDIUM TO LARGE SIZE DJ CONTROLLERS
FRGSDJCM
- GLIDE STYLE LAPTOP PLATFORM

Standard

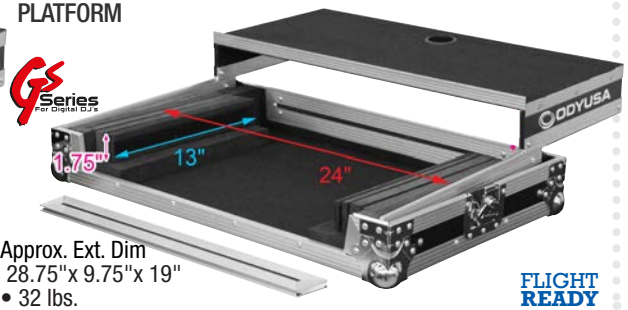

Approx. Ext. Dim
28.75"x 9.75"x 19"
- 32 lbs.

FLIGHT READY

26.75"w x 13.5"d ADJUSTABLE FOAM INTERIOR CASE WITH LAPTOP PLATFORM HOLDS MOST LARGE SIZE DJ CONTROLLERS
FRGSDJCL
- GLIDE STYLE LAPTOP PLATFORM

Standard

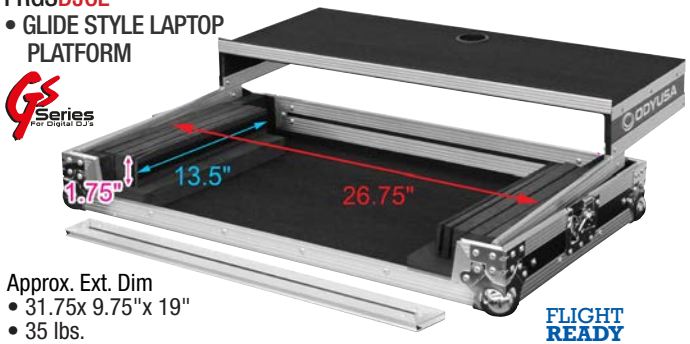

Approx. Ext. Dim
- 31.75x 9.75"x 19"
- 35 lbs.

FLIGHT READY

20"w x13"d ADJUSTABLE FOAM INTERIOR CASE WITH LAPTOP PLATFORM HOLDS MOST SMALL TO MEDIUM SIZE DJ CONTROLLERS
FZGSDJC1
- GLIDE STYLE LAPTOP PLATFORM

Standard

Approx. Ext. Dim
- 24.75" x 8.75" x 18.25"
- 25 lbs.

FLIGHT ZONE®

24"w x13"d ADJUSTABLE FOAM INTERIOR CASE WITH LAPTOP PLATFORM HOLDS MOST MEDIUM TO LARGE SIZE DJ CONTROLLERS
FZGSDJC1L
- GLIDE STYLE LAPTOP PLATFORM

Standard

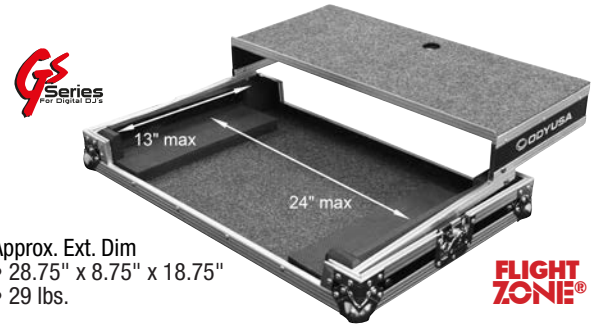

Approx. Ext. Dim
- 28.75" x 8.75" x 18.75"
- 29 lbs.

FLIGHT ZONE®

26.75"w x 13.5"d ADJUSTABLE FOAM INTERIOR CASE WITH LAPTOP PLATFORM HOLDS MOST LARGE SIZE DJ CONTROLLERS
FZGSDJC2
- GLIDE STYLE LAPTOP PLATFORM

Standard

Approx. Ext. Dim
- 31.5" x 8.75" x 18.75"
- 31 lbs.

FLIGHT ZONE®

2u 12-3/8" INTERIOR SHALLOW RACK
FZER2

Standard

- Pro Effect Rack Flight Case: 2U Flight Zone® Series

Approx. Ext. Dim
- 21.5" x 5.5" x 21.25"
- 19 lbs.

FLIGHT ZONE®

4u 12-3/8" SHALLOW RACK
FZER4

Standard

Approx. Ext. Dim
- 21.5" x 9" x 21.25"
- 26 lbs.

FLIGHT ZONE®

4u 12-3/8" SHALLOW RACK
FZER4HW

Standard

- with pullout handle and wheels

Approx. Ext. Dim
- 21.5" x 12.25" x 21.25"
- 28 lbs.

FLIGHT ZONE®

6u 12-3/8" SHALLOW RACK
FZER6

Standard

- Pro Effect Rack Flight Case: 6U Flight Zone® Series

Approx. Ext. Dim
- 21.25" x 12.25" x 21.25"
- 28 lbs.

FLIGHT ZONE®

6u 12-3/8" SHALLOW RACK
FZER6HW

Standard

- with pullout handle and wheels

Approx. Ext. Dim
- 21.25" x 14.25" x 21.25"
- 36 lbs.

FLIGHT ZONE®

8u 12-3/8" SHALLOW RACK
FZER8HW

Standard

- with pullout handle and wheels

Approx. Ext. Dim
- 21.25" x 17.25" x 21.25"
- 39 lbs.

FLIGHT ZONE®

2u SHALLOW DEPTH EFFECT RACKS
FRER2

- Effects Rack Flight Case: 2U Flight Ready® Series

Standard

Approx. Ext. Dim
- 22" x 5.5" x 20"
- 14.2 lbs.

FLIGHT READY

4u EFFECT RACK FLIGHT CASE
FRER4

- 4U Flight Ready® Series

Standard

Approx. Ext. Dim
- 21.375" x 9.25" x 20.125"
- 18.4 lbs.

FLIGHT READY

6u SHALLOW DEPTH EFFECT RACKS
FRER6

- Effects Rack Flight Case: 6U Flight Ready® Series

Standard

Approx. Ext. Dim
- 21" x 11.5" x 20"
- 20 lbs.

FLIGHT READY

8u SHALLOW DEPTH EFFECT RACKS
FRER8

- Effects Rack Flight Case: 8U Flight Ready® Series

Standard

Approx. Ext. Dim
- 21" x 15.5" x 20"
- 20 lbs.

FLIGHT READY

2u 16-1/2 AMP RACKS
FZAR2

Standard

Approx. Ext. Dim
- 21.5" x 7.5" x 25.25"

Approx. Int. Dim
- 19" x 16.5" x 3.5"
- 21 lbs.

FLIGHT ZONE®

4u RACK 16-1/2" INTERIOR DEPTH
FZAR4

Standard

Approx. Ext. Dim
- 21.5" x 9.5" x 25.25"

Approx. Int. Dim
- 19" x 16.5" x 7"
- 29 lbs.

FLIGHT ZONE®

6u 16-1/2 AMP RACKS
FZAR6

Standard

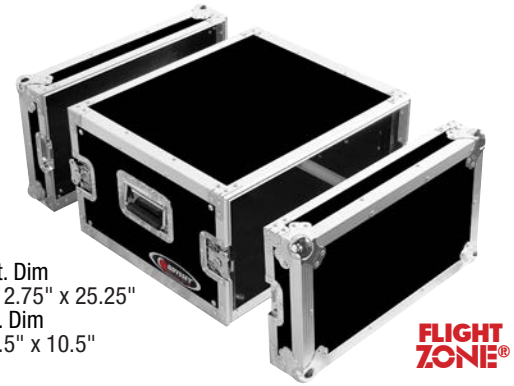

Approx. Ext. Dim
- 21.5" x 12.75" x 25.25"

Approx. Int. Dim
- 19" x 16.5" x 10.5"
- 33.5 lbs.

FLIGHT ZONE®

8u 16-1/2 AMP RACKS
FZAR8

Standard

Approx. Ext. Dim
- 21.5" x 16.75" x 25.25"

Approx. Int. Dim
- 19" x 16.5" x 14"
- 36 lbs.

FLIGHT ZONE®

10u 16-1/2 AMP RACKS
FZAR10

Standard

Approx. Ext. Dim
- 21.5" x 19.5" x 25.25"

Approx. Int. Dim
- 19" x 16.5" x 17.5"
- 44 lbs.

FLIGHT ZONE®

12u 16-1/2 RAMP RACKS
FZAR12

Standard

Approx. Ext. Dim
- 21.5" x 25.25" x 23.25"

Approx. Int. Dim
- 19" x 16.5" x 21"
- 47.8 lbs.

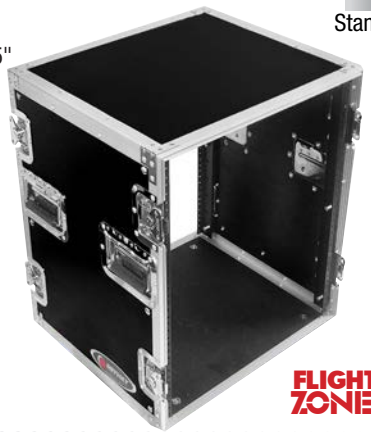

FZAR12W

Approx. Ext. Dim
- 21.5" x 25.25" x 21"

Approx. Int. Dim
- 19" x 16.5" x 17.5"
- 67 lbs.

FLIGHT ZONE®

14u 16-1/2 AMP RACKS
W/WHEELS
FZAR14W

Standard

Approx. Ext. Dim
- 21.5" x 31.75" x 25.5"

Approx. Int. Dim
- 19" x 16" x 24.5"
- 66 lbs.

FLIGHT ZONE®

16u 16-1/2 AMP RACKS

FZAR16

Approx. Ext. Dim
- 21.5" x 30" x 25.5"

Approx. Int. Dim
- 19" x 16.5" x 28"
- 56.4 lbs.

FZAR16W
W/WHEELS

Approx. Ext. Dim
- 21.5" x 34" x 25.5"

Approx. Int. Dim
- 19" x 16.5" x 28"
- 74 lbs.

FZAR16WBL
W/WHEELS BLACK LABEL

Approx. Ext. Dim
- 21.5" x 34" x 25.5"

Approx. Int. Dim
- 19" x 16.5" x 28"
- 70 lbs.

Standard

Black Label

FLIGHT ZONE®

20u 16-1/2 AMP RACKS

FZAR20W
• with wheels

Standard

Approx. Ext. Dim
• 21.5" x 42.13" x 25.1"
Approx. Int Dim
• 19" x 16.5" x 35"
• 75.4 lbs.

FLIGHT ZONE®

2u 16-3/8 AMP RACKS

FRAR2E

Standard

Approx. Ext. Dim
• 21.5" x 5.5" x 23.75"
Approx. Int Dim
• 19" x 16.5" x 3.5"
• 14 lbs.

FLIGHT READY

4u 16-3/8 AMP RACKS

FRAR4E

Standard

Approx. Ext. Dim
• 21.5" x 9.25" x 23.75"
Approx. Int Dim
• 19" x 16.375" x 7"
• 19 lbs.

FLIGHT READY

6u 16-3/8 AMP RACKS

FRAR6E

Standard

Approx. Ext. Dim
• 21" x 12.5" x 23.75"
Approx. Int Dim
• 19" x 16.375" x 10.5"
• 21 lbs.

FLIGHT READY

8u 16-3/8 AMP RACKS

FRAR8E

Standard

Approx. Ext. Dim
• 21" x 15.75" x 23.75"
Approx. Int Dim
• 19" x 16.375" x 14"
• 27 lbs.

FLIGHT READY

16u 16-3/8 AMP RACKS

FR16WE
• with wheels

Standard

Approx. Ext. Dim
• 21.5" x 34.5" x 23.75"
Approx. Int Dim
• 19" x 16.375" x 28"
• 52 lbs.

FLIGHT READY

18-1/2" SHOCK MOUNT RACKS

Standard

FZS02 (2u)
Approx. Ext. Dim
• 24" x 8.5" x 26.5"
Approx. Int Dim
• 19" x 18.5" x 3.5"
• 42 lbs.

FZS04 (4u)
Approx. Ext. Dim
• 24" x 12" x 26.5"
Approx. Int Dim
• 19" x 18.5" x 7"
• 47 lbs.

FZS06 (6u)
Approx. Ext. Dim
• 24" x 15.5" x 26.5"
Approx. Int Dim
• 19" x 18.5" x 10.5"
• 52 lbs.

FZS08 (8u)
Approx. Ext. Dim
• 24" x 19" x 26.5"
Approx. Int Dim
• 19" x 18.5" x 14"
• 77 lbs.

FLIGHT ZONE®

12u SHOCK MOUNT RACK W/WHEELS

FZS12W

Standard

Approx. Ext. Dim
• 24" x 32" x 26.5"
Approx. Int Dim
• 19" x 18.5" x 21"
• 87 lbs.

FLIGHT ZONE®

14u SHOCK MOUNT RACK W/WHEELS

FZS14W

Standard

Approx. Ext. Dim
• 24" x 32.25" x 28"
Approx. Int Dim
• 19" x 18.5" x 24.5"
• 91 lbs.

FLIGHT ZONE®

10u x2u COMBO RACK W/TOP GLIDE PLATFORM

FZGS1002
FZGS1002BL

- 10U top rack
- 2U bottom rack

Standard
Black Label

Approx. Ext. Dim
- 22" x 15.75" x 24"
- 41 lbs.

FLIGHT ZONE®

10u x4u COMBO RACK W/TOP GLIDE PLATFORM

FZGS1004
FZGS1004BL

- 10U top rack
- 4U bottom rack

Standard
Black Label

Approx. Ext. Dim
- 22" x 19.75" x 24"
- 44 lbs.

FLIGHT ZONE®

10u x14u COMBO RACKS

FZ1014W

- 10U top rack
- 14U bottom rack

Standard

Approx. Ext. Dim
- 21.5" x 41.5" x 24"
- 71.6 lbs.

FLIGHT ZONE®

10u x16u COMBO RACKS

FZ1016W

- 10U top rack
- 16U bottom rack

Standard

Approx. Ext. Dim
- 21.5" x 44" x 24"
- 82 lbs.

FLIGHT ZONE®

10u x16u DELUXE COMBO RACK W/TOP GLIDE PLATFORM & SIDE TABLE

FRGS1016WDLX
FRGS106WDLXBL

- 10U top rack
- 6U bottom rack

Standard
Black Label

Approx. Ext. Dim
- 22" x 44.5" x 23"
- 33.6 lbs.

FLIGHT READY

11u x 8u COMBO RACKS

FZ1108

- 11U top rack
- 8U bottom rack

Standard

Approx. Ext. Dim
- 21.5" x 25.75" x 26"
- 50 lbs.

FLIGHT ZONE®

11u x12u COMBO RACKS

FZ1112W

- 11U top rack
- 12U bottom rack

Standard

Approx. Ext. Dim
- 21.5" x 37.25" x 28"
- 75 lbs.

FLIGHT ZONE®

11u x12u DELUX 1COMBO RACKS W/WHEELS & ONE SIDE TABLE

FZ1112WDLX

- 11U top rack
- 12U bottom rack

Standard

Approx. Ext. Dim
- 21.5" x 37.25" x 28.5"
- 87 lbs.

FLIGHT ZONE®

11u x16u with wheels

FZ1116W
- 11U top rack
- 16U bottom rack

Standard

Approx. Ext. Dim
- 21.5" x 44.75" x 28.5"
- 93 lbs.

FLIGHT ZONE®

11u x 16u WITH 1SIDE TABLE with wheels

FZ1116WDLX
- 11U top rack
- 16U bottom rack

Standard

Approx. Ext. Dim
- 21.5"x 44.75" x 28.5"
- 99 lbs.

FLIGHT ZONE®

11u x16u WITH 2 SIDE TABLES with wheels

FZ1116WDLXII
FZ1116WDLXIIBL
- 11U top rack
- 16U bottom rack

Standard

Black Label

Approx. Ext. Dim
- 21.5" x 44.75" x 28.5"
- 105 lbs.

FLIGHT ZONE®

11u x 16u COMBO RACK W/TOP GLIDE PLATFORM

FZGS1116W
- 11U top rack
- 16U bottom rack

GS Series For Digital DJ's

Standard

Approx. Ext. Dim
- 22" x 45.25" x 28.5"
- 91.6 lbs.

FLIGHT ZONE®

11Uu x 16u DELUXE COMBO RACK W/TOP GLIDE PLATFORM & SIDE TABLE

FZGS1116WDLX
- 11U top rack
- 16U bottom rack

GS Series For Digital DJ's

Standard

Approx. Ext. Dim
- 22" x 45.25" x 28.5"
- 95 lbs.

FLIGHT ZONE®

12u x14u DELUXE COMBO RACKS W/WHEELS & TWO SIDE TABLES

FZ1214WDLXII
- 12U top rack
- 14U bottom rack

Standard

Approx. Ext. Dim
- 21.5" x 41"x 31.25"
- 100 lbs.

FLIGHT ZONE®

11u x16u DELUXE COMBO RACK W/TOP GLIDE PLATFORM & 2 SIDE TABLES

FZGS1214WDLXII
- 11U top rack
- 16U bottom rack

GS Series For Digital DJ's

Standard

Approx. Ext. Dim
- 21.5" x 45" x 31.25"
- 115 lbs.

FLIGHT ZONE®

13u x4u COMBO RACK W/TOP GLIDE PLATFORM

FZGS1304
- 13U top rack
- 4U bottom rack

GS Series For Digital DJ's

Standard

Approx. Ext. Dim
- 22.25" x 21" x 28.5"
- 54 lbs.

FLIGHT ZONE®

13u x16u COMBO RACK W/ WHEELS

FZ1316W
- 13U top rack
- 16U bottom rack

Standard

Approx. Ext. Dim
21.5" x 46.75" x 28.5"
- 96.2 lbs.

FLIGHT ZONE®

13u x16u COMBO RACK W/ONE SIDE TABLE

Standard

FZ1316WDLX
- 13U top rack
- 16U bottom rack

Approx. Ext. Dim
- 21.5" x 44.75" x 28.5"
- 100 lbs.

FLIGHT ZONE®

13u x16u DELUXE COMBO RACK W/TOP GLIDE PLATFORM & SIDE TABLE

Standard

FZGS1316WDLX
FZGS1316WDLXBL
- 13U top rack
- 16U bottom rack

GS Series For Digital DJ's

Approx. Ext. Dim
- 22.25" x 47" x 28.5"
- 97 lbs.

FLIGHT ZONE®

13u x16u DELUXE COMBO RACK W/WHEELS & TWO SIDE TABLES

Standard

FZ1316WDLXII
- 13U top rack
- 16U bottom rack

Approx. Ext. Dim
- 21.5" x 44.75" x 33.5"
- 104 lbs.

FLIGHT ZONE®

14u x 4u COMBO RACK W/TOP GLIDE PLATFORM

Standard

FZGS1404
- 14U top rack
- 4U bottom rack

Approx. Ext. Dim
- 22.25" x 21.75" x 35"
- 64 lbs.

FLIGHT ZONE®

14u x16u COMBO RACK W/TOP GLIDE PLATFORM

Standard

FZ1416W
- 14U top rack
- 16 U bottom rack

Approx. Ext. Dim
- 21.25" x 47.5" x 31.5"
- 38 lbs.

FLIGHT ZONE®

14u x16u DELUXE COMBO RACK W/GLIDE PLATFORM,WHEELS & SIDE TABLE

Standard

FZGS1416WDLX
- 14U top rack
- 16U bottom rack

GS Series For Digital DJ's

Approx. Ext. Dim
- 22.25" x 44.75" x 30.25"
- 111 lbs.

FLIGHT ZONE®

14u x16u DELUXE COMBO RACK W/WHEELS & TWO SIDE TABLES

Standard

FZGS1416WDLXII
- 14U top rack
- 16U bottom rack

GS Series For Digital DJ's

Approx. Ext. Dim
- 21.5" x 47.25" x 35"D
- 116 lbs.

FLIGHT ZONE®

FOUR DRAWER WORKBOX TOUR CASE WITH SIDE TABLE

Standard

FZWB4WDLX

Approx. Ext. Dim
- 24.5" x 38" x 28"
- 152 lbs.

FLIGHT ZONE®

DELUXE SIX DRAWER WORKBOX TOUR CASE W/ SIDE TABLE

Standard

FZWB6WDLX

Approx. Ext. Dim
- 25.25" x 44" x 28"
- 188 lbs

FLIGHT ZONE®

27"x 22"x 14.3"(int.) COMBO AMP CASE

Standard

FZGC112W
- Made to fit most 1 x 12 Guitar Amps
- Fits amps 18" to 25.5" wide, 9" to 13" deep, and 16" to 22" high

Approx. Ext. Dim
- 29" x 32" x 16.5"
- 50 lbs.

FLIGHT ZONE®

31.8"x 24"x 15.5"(int.) COMBO AMP CASE

Standard

FZGC212W
- Made to fit most 2 x 12 Guitar Amps
- Fits amps 25" to 30" wide, 8" to 14 deep, and 18.25" to 23.6" high

Approx. Ext. Dim
- 34"x 31" x 17.75"
- 65 lbs.

FLIGHT ZONE®

24"x24"x12"(int.) COMBO AMP CASE

Standard

FZGC410W
- Made to fit most 24x 24 x 12 Combo Amps

Approx. Ext. Dim
- 26.75" x 32" x 14.75"
- 52 lbs.

FLIGHT ZONE®

29.75"x 29"x 16.125"(int.) CABINET AMP CASE

Standard

FZG412W
- Made to fit most 4 x 12 Guitar Cabinet cases
- Fits guitar cabinet amp up to 29.75"x 29"x 16.125

Approx. Ext. Dim
- 32.25" x 37" x 19"
- 68 lbs.

FLIGHT ZONE®

30.3"x 12"x 10"(int.) AMP HEAD CASE

Standard

FZGAMPHEAD1
- Fits one amp head up to 30.25"x 12"x 10

Approx. Ext. Dim
- 32"x 14.5" x 13"
- 31 lbs.

FLIGHT ZONE®

30.25"x 13"x 13.75"(int.) DOUBLE AMP HEAD CASE

Standard

FZGAMPHEAD2X2W
- Fits 2 amp heads up to 30.25"x 13"x 13.75

Approx. Ext. Dim
- 32.75"x 34.5" x 20.25"
- 85 lbs.

FLIGHT ZONE®

17" WIDE PEDAL BOARD CASE

Standard

FZGPEDAL17
- Holds up to 17" wide pedals on a removable plate.

Approx. Ext. Dim
- 19.125"x 8.75" x 18.375"
- 19.5 lbs.

FLIGHT ZONE®

24" WIDE GUITAR PEDALS BOARD CASE

Standard

FZGPEDAL24
- Holds up to 24" wide pedals on a removable plate.

- 25.5"x 9.5" x 19.5"
- 25 lbs.

FLIGHT ZONE®

32" WIDE PEDALS BOARD CASE

Standard

FZGPEDAL32W
- Holds up to 32" wide pedals on a removable plate.

- 39.75"x 9.25" x 19.5"
- 46 lbs.

FLIGHT ZONE®

HOLDS UP TO 120 LBS (7") RECORD CASE

Standard

FZ45120

Approx. Ext. Dim
- 19.5" x 10" x 10.25"
- 11.5 lbs.

FLIGHT ZONE®

HOLDS UP TO 80 LBS (12")VINYL RECORD CASE

Standard

FZLP80

Approx. Ext. Dim
- 15" x 15" x 15"
- 22 lbs.

FLIGHT ZONE®

HOLDS UP TO 120 LBS (12") RECORD CASE W/PULL-OUT HANDLE & WHEELS

Standard

FZLP120HW
- W/recessed rollers and pullout handle

Approx. Ext. Dim
- 22" x 16.75" x 18"
- 32 lbs.

FLIGHT ZONE®

320 CD CASE HOLDS VIEWPACK CD'S OR 106 IN JEWEL CASE

Standard

FZCD320

Approx. Ext. Dim
- 26" x 9" x 10.25"
- 19 lbs.

FLIGHT ZONE®

480 VIEWPACK CD'S OR 160 JEWEL CD UTILITY CASE

Standard

FZCD480

Approx. Ext. Dim
- 39" x 9" x 16.5"
- 34 lbs.

FLIGHT ZONE®

12 MICROPHONE CASES W/STORAGE COMPARMENTS

Standard

FZMIC12
- Holds up to 12 Microphones

Approx. Ext. Dim
- 16" x 15.5" x 11.5"
- 20 lbs.

FLIGHT ZONE®

2U WIRELESS MIC RACK WITH HINGED DOOR MIC COMPARTMENT TO STORE MIC RECEIVER, BODY PACK AND BATTERIES.

FRER2WM

FLIGHT READY

18 MICROPHONE CASE W/STORAGE COMPARMENTS

Standard

FZMIC18
- Holds up to 18 Microphones

Approx. Ext. Dim
- 22.75" x 15.75" x 11"
- 16 lbs.

FLIGHT ZONE®

SHURE QLXD1 WIRELESS MICROPHONE SYSTEM CASE

Standard

FZSHQLXD1

Approx. Ext. Dim
- 19.75" x 4.5" x 18.75"
- 10 lbs.

FLIGHT ZONE®

17.5" x 3" x16" (int.) WIRELSS MIC SYSTEM/ UTILITY CARRYING CASE

Standard

FZWIRELESS

Approx. Ext. Dim
- 19" x 4.75" x 18"
- 11 lbs.

FLIGHT ZONE®

31 NOTE KEYBOARD CASE

Standard

FZKB31
- Made to fit most 31-note keyboards

Approx. Ext. Dim
- 29" x 32" x 16.5"
- 50 lbs.

FLIGHT ZONE®

37 NOTE KEYBOARD CASE

Standard

FZKB37
- Made to fit most 37-note keyboards

Approx. Ext. Dim
- 37.75" x 9.5" x 18.25"
- 32 lbs.

FLIGHT ZONE®

49 NOTE KEYBOARD CASE

Standard

FZKB49W
- Made to fit most 49-note keyboards

Approx. Ext. Dim
- 41.75" x 9.25" x 18.5"
- 26.4 lbs.

FLIGHT ZONE®

61 NOTE KEYBOARD CASE

Standard

FZKB61W
- Made to fit most 61-note keyboards

Approx. Ext. Dim
- 48.5" x 8" x 19.5"
- 43 lbs.

FLIGHT ZONE®

76 NOTE KEYBOARD CASE

Standard

FZKB76W
- Made to fit most 76-note keyboards

Approx. Ext. Dim
- 56" x 10" x 20"
- 52 lbs.

FLIGHT ZONE®

88 NOTE KEYBOARD CASE

Standard

FZKB88W
- Made to fit most 88-note keyboards

Approx. Ext. Dim
- 63" x 10" x 24"
- 63 lbs.

FLIGHT ZONE®

42"x 26" KEYBOARD STRETCH COVER

ASCK61
Approx. Ext. Dim
- Min stretch dims: 25"x14"
- Max stretch dims: 42"x26"
- 1 lbs.

51"x 26" KEYBOARD STRETCH COVER

ASCK76
Approx. Ext. Dim
- Min stretch dims: 30"x14"
- Max stretch dims: 51"x26"
- 1 lbs.

60"x 26" KEYBOARD STRETCH COVER

ASCK88
Approx. Ext. Dim
- Min stretch dims: 34"x14"
- Max stretch dims: 60"x26"
- 1 lbs.

8 PAR CANS CASE

FZPAR1
- Fits (4) Par 56s with tripod stand and accessories.
- 48.5" x 20" x 16.75"
- 50 lbs.

FZPAR2W
- Fits (8) Par 64s w/tripod stand and accessories.
- 59" x 36" x 25.5"
- 110 lbs.

FLIGHT ZONE®

8 LEKOS CASE W/ WHEELS

FZLEKO8W
- Holds 8 Fixtures

Approx. Ext. Dim
- 44" x 42.75" x 23.75"
- 150 lbs.

FLIGHT ZONE®

UTILITY TRUNK

FZSLDC1
- 22" x 10" x 22" Interior

Approx. Ext. Dim
- 25" x 13.75" x 25"
- 20 lbs.

FLIGHT ZONE®

UTILITY TRUNK W/WHEELS

FZSLDC2W
- 29.5" x 16" x 12.5" Interior

Approx. Ext. Dim
- 32" x 21.75" x 15"
- 33 lbs.

FLIGHT ZONE®

SMALL 250 MOVING HEAD CASE W/WHEELS

FZMH250SX2W

Approx. Ext. Dim
- 34.25" x 33" x 17.75"
- 85 lbs.

FLIGHT ZONE®

LARGE 250 MOVING HEAD CASE W/WHEELS

FZMH250X2W

Approx. Ext. Dim
- 21" x 35.5" x 36"
- 100 lbs.

FLIGHT ZONE®

CHAUVET INTIMIDATOR BEAM/SPOT CASE

FZCHINT350X2W
- Made to fit Chavet Intimidator Beam/Spot 300/350/355Z IRC 400 Dual Moving Heads

Approx. Ext. Dim
- 28.5" x 30.5" x 16.75"
- 79 lbs.

FLIGHT ZONE®

42" FLAT SCREEN CASE W/WHEELS

FZPLASMA42W

Approx. Ext. Dim
- 49.5" x 37" x 15.25"
- 95 lbs.

FLIGHT ZONE®

50" FLAT SCREEN CASE W/ WHEELS

FZPLASMA50W

Approx. Ext. Dim
- 62.5" x 44.5" x 16.5"
- 112 lbs.

FLIGHT ZONE®

60-65" FLAT SCREEN CASE W/WHEELS

FZFSM65W

Approx. Ext. Dim
- 68" x 46.25" x 17.75"
- 148lbs.

FLIGHT ZONE®

DUAL 60-65" TV FLAT SCREEN CASE W/ WHEELS

FZ2FSM65W

Standard

Approx. Ext. Dim
- 68.25"x 46.25" x 23"
- 168 lbs.

FLIGHT ZONE®

4U 19" RACK MOUNTABLE LIGHT CONTROLLER CASE

FRLC04
- 4U RACK SPACE

Approx. Ext. Dim
- 21" x 6.75" x 9"
- 9 lbs.

FLIGHT READY

8U 19" RACK MOUNTABLE LIGHT CONTROLLER CASE

FRLC08
- 8U RACK SPACES

Approx. Ext. Dim
- 21" x 6.75" x 16.2R5"
- 13 lbs.

FLIGHT READY

ALLEN & HEATH QU-24 MIXING CONSOLE CASE W/WHEELS

Standard

FZQU24W

Approx. Ext. Dim
- 29" x 11" x 25"
- 35 lbs.

FLIGHT ZONE®

ALLEN & HEATH QU-32 MIXING CONSOLE CASE W/WHEELS

Standard

FZQU32W

Approx. Ext. Dim
- 37.5" x 10.75" x 25"
- 41 lbs.

FLIGHT ZONE®

BEHRINGER X32 CASE

FZBEHX32COM

Standard

Approx. Ext. Dim
- 28.5" x 11.25" x 25.75"
- 33 lbs.

FLIGHT ZONE®

BEHRINGER X32 CASE WITH DOG HOUSE

FZBEHX32DHW
- Doghouse Cable Cover and Wheels

Standard

Approx. Ext. Dim
- 38.75" x 36.5" x 13.5"
- 94 lbs.

FLIGHT ZONE®

BEHRINGER X32 MIXING CONSOLE CASE W/WHEELS

Standard

FZBEHX32W

Approx. Ext. Dim
- 39.25" x 11.5" x 26.25"
- 46 lbs.

FLIGHT ZONE®

MACKIE CFX12 / CFX MKII MIXING CONSOLE CASE

Standard

FZCFX12

Approx. Ext. Dim
- 20.5" x 7.25" x 18"
- 14 lbs.

FLIGHT ZONE®

MACKIE CFX16/CFX 16 MKII MIXING CONSOLE CASE

Standard

FZCFX16

Approx. Ext. Dim
25" x 7" x 18.5"
- 17 lbs.

FLIGHT ZONE®

MACKIE CFX20 /CFX 20 MKII PROFX22 MIXING CONSOLE CASE

Standard

FZCFX20

Approx. Ext. Dim
- 29.25" x 8" x 18.5"
- 22 lbs.

FLIGHT ZONE®

MACKIE SR24.4 MIXING CONSOLE CASE

Standard

FZM244

Approx. Ext. Dim
- 34" x 9.5" x 25"
- 36 lbs.

FLIGHT ZONE®

MACKIE VLZ 3204 MIXING CONSOLE CASE W/WHEELS

Standard

FZVLZ3204W

Approx. Ext. Dim
- 41" x 8.75" x 26.5"
- 40 lbs.

FLIGHT ZONE®

MIDAS M32 MIXING CONSOLE CASE
FZMIDM32

Standard

Approx. Ext. Dim
- 39.75" x 14" x 29.75"
- 53 lbs.

FLIGHT ZONE®

MIDAS M32 MIXING CONSOLE CASE W/DOGHOUSE CABLE COVER & WHEELS
FZMIDM32DHW

Standard

Approx. Ext. Dim
- 36.75" x 42.5" x 15.5"
- 114 lbs.

FLIGHT ZONE®

PEAVEY 24FX 24 CHANNEL MIXING CONSOLE CASE
FZ24FX24

Standard

Approx. Ext. Dim
- 27.25" x 11" x 24"
- 34 lbs.

FLIGHT ZONE®

PEAVEY 32FX 32 CHANNEL MIXING CONSOLE CASE
FZ32FX32

Standard

Approx. Ext. Dim
- 35.25" x 10.5" x 24.5"
- 41.4 lbs.

FLIGHT ZONE®

PEAVEY PV14 MIXING CONSOLE CASE
FZPV14

Standard

Approx. Ext. Dim
- 18.25" x 5.5" x 17.5"
- 11.6 lbs.

FLIGHT ZONE®

YAMAHA 5014 / 5016 MIXING CONSOLE CASE
FZ5014

Standard

Approx. Ext. Dim
- 20" x 9.25" x 24.5"
- 26 lbs.

FLIGHT ZONE®

YAMAHA EMX5000 20 CHANNEL MIXING CONSOLE CASE
FZEMX500020

Standard

Approx. Ext. Dim
- 28" x 8.75" x 26"
- 33.6 lbs.

FLIGHT ZONE®

YAMAHA MG16E / MG16FX MIXING CONSOLE CASE
FZMG16E

Standard

Approx. Ext. Dim
- 21.5" x 6.75" x 18"
- 12.8 lbs.

FLIGHT ZONE®

YAMAHA MGP 24X MIXING CONSOLE CASE W/ WHEELS
FZMGP24XW

Standard

Approx. Ext. Dim
- 35.25" x 9.5" x 28.75"
- 39 lbs.

FLIGHT ZONE®

YAMAHA TF1 MIXING CONSOLE CASE
FZTF1

Standard

Approx. Ext. Dim
- 22.75" x 12" x 30"
- 30 lbs.

FLIGHT ZONE®

YAMAHA TF3 MIXING CONSOLE CASE W/ WHEELS
FZTF3W

Standard

Approx. Ext. Dim
- 30" x 11.25" x 31"
- 31 lbs.

FLIGHT ZONE®

YAMAHA TF5 MIXING CONSOLE CASE WITH WHEELS

FZTF5W

Standard

Approx. Ext. Dim
- 36.75" x 11.75" x 30"
- 45 lbs.

FLIGHT ZONE®

10u MIXER CASE

FZ19MIX
- 10 U Rack Space

Standard

Approx. Ext. Dim
- 21.5" x 10.5" x 20"
- 23.8 lbs.

FLIGHT ZONE®

12u MIXER CASE

FZMX1912
- 12 U Rack Space

Standard

Approx. Ext. Dim
- 21.5" x 10" x 26.5"
- 34 lbs.

FLIGHT ZONE®

13u MIXER CASE

FZMX1913
- 13 U Rack Space

Standard

Approx. Ext. Dim
- 21.25" x 11.25" x 28"
- 34 lbs.

FLIGHT ZONE®

NON-RACK MOUNTABLE MIXER CASE

FZNR19MIX
- Fits gear up to 19.25"x 7.5"x18+3"

Standard

Approx. Ext. Dim
- 21.75" x 10.625" x 23.625"
- 28 lbs.

FLIGHT ZONE®

10u MIXER CASE WITH GLIDE PLATFORM

FZGS10
- 10 U Rack Space

Standard

GS Series For Digital DJ's

Approx. Ext. Dim
- 22.25" x 12" x 20"
- 32 lbs.

FLIGHT ZONE®

12u MIXER CASE WITH GLIDE PLATFORM

FZGSMX1912
- 12 U Rack Space

Standard

GS Series For Digital DJ's

Approx. Ext. Dim
- 23" x 11.75" x 26.75"
- 40 lbs.

FLIGHT ZONE®

13u MIXER CASE WITH GLIDE PLATFORM

FZGSMX1913
- 13 U Rack Space

Standard

GS Series For Digital DJ's

Approx. Ext. Dim
- 23" x 11.75" x 26.75"
- 40 lbs.

FLIGHT ZONE®

11"x 9.25"x 4"(int.) UTILITY CASE

Standard

FZUC

Approx. Ext. Dim
- 15"x 6.5"x 13"
- 5 lbs.

FLIGHT ZONE®

22.5"x 17.625"x 1.25"(int.) UTILITY CASE

Standard

FZDRC

Approx. Ext. Dim
- 24.75"x 10"x 20.375"
- 19 lbs.

FLIGHT ZONE®

22.8"x 3"x11.5"(int.) UTILITY CASE

Standard

FZLUC

Approx. Ext. Dim
- 23.5"x 6.75"x 12.25"
- 10 lbs.

FLIGHT ZONE®

19.5"x 20"x19.5"(int.) TRUNK WITH ORGANIZING DIVIDERS

Standard

FZUT32222

Approx. Ext. Dim
- 22"x 22" x 22"
- 44 lbs.

FLIGHT ZONE®

24.5"x 16"x19.5"(int.) TRUNK WITH ORGANIZING DIVIDER

Standard

FZUT32722

Approx. Ext. Dim
- 27"x 18" x 22"
- 44 lbs.

FLIGHT ZONE®

41.5"x 20"x19.5"(int.) TRUNK WITH WHEELS AND ORGANIZING DIVIDERS

Standard

FZUT34422

Approx. Ext. Dim
- 44"x 23" x 22"
- 71 lbs.

FLIGHT ZONE®

41.5"x 20"x19.5"(int.) TRUNK WITH WHEELS AND ORGANIZING DIVIDERS

Standard

FZUT34422W
- 41.5" x 20" x 19.5" Interior

Approx. Ext. Dim
- 44"x 27" x 22"
- 91 lbs.

FLIGHT ZONE®

41.5"x 20"x19.5"(int.) TRUNK WITH WHEELS, CASTER STACKING PLATES, & ORGANIZING DIVIDERS

Standard

FRTUT34422WS

Approx. Ext. Dim
- 44"x 27" x 22"
- 93v lbs.

FLIGHT READY

20"x 23.5"x 20"(int.) TRUCK PACK CASE

Standard

FRTP020W

Approx. Ext. Dim
- 22"x 29.34" x 22"
- 45.4 lbs.

FLIGHT READY

42"x 27"x23"(int.) TRUNK CASE WITH ORGANIZING TRAYS AND DIVIDERS

Standard

FZUT2W

Approx. Ext. Dim
- 22"x 29.34" x 22"
- 45.4 lbs.

FLIGHT ZONE®

42"x 27"x23"(int.) TRUNK

Standard

FZUT2W-EMPTY

Approx. Ext. Dim
- 44.75"x 31"x 29.5"
- 136 lbs.

FLIGHT ZONE®

NEED CUSTOM U.S.A MADE CASES? WE'RE YOUR ANSWER!

MOVING HEAD FIXTURES

Designed and built to transport medium to large, dual or quad fixtures for name brands such as ADJ, Elation, Chauvet and High End Systems, just to name a few. We build cases with or without extra compartments. Standard specs include 3/8" ply construction, fully foam and carpet lined interiors, removable lids, and 4" heavy-duty casters.

TECH BOXES

Custom workbox with plenty of room to work around. Top lid opens up to a smooth work area. Back lid comes off and converts into a table top lid. Front lid hinges open exposing area for spray cans, tape and any small miscellaneous items along with a flip up top section to give you even more table space. There are plenty of drawers to accommodate all your needs.

MOTORIZED OR PISTON ASSIST MONITORS

LED monitor case with motorized electronic lift with 4" casters. Top lid comes completely off to access lift and optional storage drawer on the base for accessories.

TRUCK PACK UTILITY TOURING CASE

CTP020W

Use our truck pack utility touring case for a fast and efficient use of space. Its great for easy loading in and out of venues.

Made to order

Approx. Ext. Dim
- 22.75"x 29.25"x 22.75"
- 46 lbs.

ORDERING GUIDE / OPTIONS: Casters, Corners, Latches & Colors

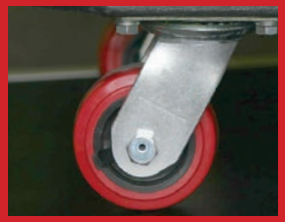

CASTERS

3", 3.5", 4", 4"x 2" Casters
Zinc plated swivel caster with infinity ball bearing swivel raceways. Brakes optional.

Recessed Caster
3" recessed diecast corner caster with 90° radius, soft rubber gray wheel - 125 lbs. capacity.

CORNERS

Heavy Duty Ball Corner
16 gauge steel ball corner.

Large Flat Stacking Corner
16 gauge steel medium flat corner. Also available with foot or stackable.

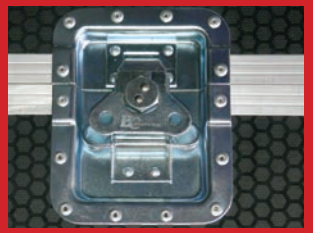

LATCHES

Heavy Duty Large Recessed Handles

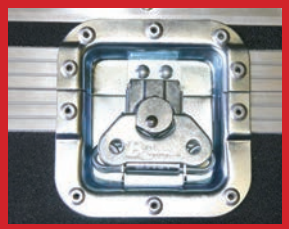

Heavy Duty Standard Recessed Handles

Available in 1/4", 3/8", and 1/2" Ply.
Standard colors available in both ABS & fiberglass

Textured Coated

iBoard

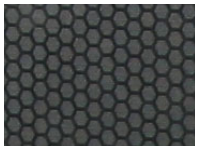

Aluminum Stucco

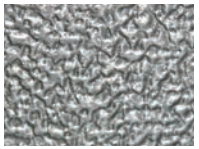

Tuff Kote

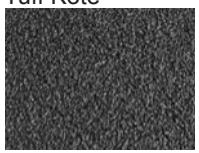

17"x 2.8" x 4.25"(int.) SMALL CARRYING CASE
VUXS

Approx. Ext. Dim
- 8.25"x 3.5"x 6.5"
- 2 lbs.

VULCAN SERIES

8.25"x 2"x 4.25"(int.) EXTRA SMALL CARRYING CASE
VUXS2

Approx. Ext. Dim
- 9.25"x 2.5"x 5.25"
- .6 lbs.

VULCAN SERIES

11.5"x 3.8"x 8.3"(int.) SMALL CARRYING CASE
VUS

Approx. Ext. Dim
- 13"x 5"x 11"
- 5 lbs.

VULCAN SERIES

9.25"x 7.25"x 7.25"(int.) SMALL VER.2 CARRYING CASE
VUS2

Approx. Ext. Dim
- 11.75"x 8"x 9.5"
- 4 lbs.

VULCAN SERIES

15.3"x 4.3"x 12"(int.) MEDIUM CARRYING CASE
VUM

Approx. Ext. Dim
- 17"x 6.25"x 15.13"
- 8 lbs.

VULCAN SERIES

18.3"x7"x13.5" (int.) LARGE CARRYING CASE
VUL

Approx. Ext. Dim
- 20.5"x 7.83"x 16.5"
- 11 lbs.

VULCAN SERIES

16"x9"x10"(int.) CARRYING CASE WITH SHOULDER STRAP
VU160910S
- 16" x 9" x 10" Interior

Approx. Ext. Dim
- 16.5"x 11"x 11"
- 7 lbs.

VULCAN SERIES

RANE SIXTY-TWO DJ MIXER CARRYING CASE
VURANE62

AVAILABLE BY SPECIAL ORDER ONLY

Approx. Ext. Dim
- 20.5"x 7.75"x 16.5"
- 11 lbs.

VULCAN SERIES

PIONEER CDJ-2000NXS2 MEDIA PLAYER CARRYING CASE
VUCDJM2000NXS2

Approx. Ext. Dim
- 20.5"x 7.75"x 16.5"
- 11 lbs.

VULCAN SERIES

PIONEER DJM-S9 DJ MIXER CARRYING CASE
VUDJM9

Approx. Ext. Dim
- 20.5"x 7.75"x 16.5"
- 11 lbs.

VULCAN SERIES

PIONEER DJM-900NXS2 DJ MIXER CARRYING CASE
VUDJM900NXS2

Approx. Ext. Dim
- 20.5"x 7.75"x 16.5"
- 11 lbs.

VULCAN SERIES

DENON SC5000/SC5000M PRIME MEDIA PLAYER CARRYING CASE
VUSC5000

Approx. Ext. Dim
- 20.5"x 7.75"x 16.5"
- 11 lbs.

VULCAN SERIES

DENON X1800 PRIME DJ MIXER CARRYING CASE
VUX1800

Approx. Ext. Dim
- 20.5"x 7.75"x 16.5"
- 11 lbs.

VULCAN SERIES

TURNTABLE CARRYING CASE
VU1200

Another first from us here at Odyssey. From our Vulcan series line of airtight/ watertight cases, we bring you the VU1200. Each case is injection molded of high strength polymer resin which provides you with the ultimate in protection for your Tables. The VU1200 features a custom foam fit interior designed specifically for Technics 1200's. Additional features include comfortable carrying easy grip handle, altitude pressure release valve, and two padlock holes.

Approx. Ext. Dim
- 23.5"x 8.5"x 20.5"
- 12.5 lbs.

VULCAN SERIES

17"x7"x13.5" (int.) CARRYING CASE WITH PULLOUT HANDLE AND WHEELS
VU170714HW

Approx. Ext. Dim
- 18.5"x 9"x 15.5"
- 11 lbs.

VULCAN SERIES

20"x 7"x 11.5"(int.) CARRYING CASE WITH PULLOUT HANDLE AND WHEELS
VU200711HW

Approx. Ext. Dim
- 22"x 9"x 14"
- 11 lbs.

VULCAN SERIES

14"x22.75"x11.75 (int.) CARRYING CASE WITH PULLOUT HANDLE AND WHEELS
VU221411HW

Approx. Ext. Dim
- 15.5"x 24.25"x 13.5"
- 16 lbs.

VULCAN SERIES

20"x9.5"11.5" (int.) CARRYING CASE WITH PULLOUT HANDLE AND WHEELS
VU200911HW

Approx. Ext. Dim
- 22"x 11.5"x 13.5"
- 12 lbs.

VULCAN SERIES

35.75"x 5.25"x14.5" (INT.) CARRYING CASE WITH WHEELS
VU350514W

Approx. Ext. Dim
- 38.5"x 6.75"x 17"
- 18 lbs.

VULCAN SERIES

AMP RACKS
VUAR2U
VUAR3U
VUAR4U
VUAR6U

Odyssey's Vulcan series line of watertight molded racks.

Available in 2, 3, 4 & 6 u.

VULCAN SERIES

42"x5.5"x14.5"(int.) CARRYING CASE WITH WHEELS
VU420514W

Approx. Ext. Dim
- 44.5"x 6.5"x 16.5"
- 20 lbs.

VULCAN SERIES

50"x5.5"x13" (int.) CARRYING CASE WITH WHEELS
VU500513W

Approx. Ext. Dim
- 52.5"x 6.25"x 15.5"
- 23 lbs.

VULCAN SERIES

TECHNICS 1200 STYLE TURNTABLE CASE

CTTE

- Holds Technics 1200 Style DJ Turntables

Approx. Ext. Dim
- 22.5"x 8.5"x 17"
- 18 lbs.

CARPET

TECHNICS 1200 STYLE PRO TURNTABLE CASE

CTTP

- Carpeted Cases
- Holds Technics 1200 Style DJ Turntables

Approx. Ext. Dim
- 22.5"x 8.5"x 17"
- 20 lbs.

CARPET

10" MIXER DJ COFFIN WITH LAPTOP PLATFORM

CGSBM10

- Holds a 10" Format DJ Mixer & 2 Turntables In Battle Position

Approx. Ext. Dim
- 47.5"x 9.25"x 21.25"
- 52 lbs.

CARPET

10" MIXER DJ COFFIN

CDJ10E

- Holds A 10" Format DJ Mixer and 2 Turntables In Standard Position

Approx. Ext. Dim
52"x 7"x 18.5"
- 42 lbs.

CARPET

10" MIXER PRO DJ COFFIN

CDJ10 (PRO)

- Holds A 10" Format DJ Mixer and 2 Turntables In Standard Position

Approx. Ext. Dim
- 52"x 7"x 18.5"
- 47 lbs.

CARPET

10" MIXER DJ COFFIN IN BATTLE POSITION

CBM10E

- Holds A 10" Format DJ Mixer & 2 Turntables In Battle Position

Approx. Ext. Dim
- 47"x 7.5"x 21.5"
- 42 lbs.

CARPET

10" MIXER PRO DJ COFFIN

CDJ19P

- Holds A 19" Rack Mountable DJ Mixer & 2 Turntables In Standard Position

Approx. Ext. Dim
- 63"x 8.5"x 18"
- 50 lbs.

CARPET

10" MIXER PRO DJ COFFIN

CBM10

- Holds A 10" Format DJ Mixer & 2 Turntables In Battle Position

Approx. Ext. Dim
- 47"x 7.5"x 21.5"
- 42 lbs.

CARPET

12" CD/DIGITAL MEDIA PLAYER DJ COFFIN

CGS12CDJ

- Holds a 12" Format DJ Mixer and 2 Large Format CDJ Players
- Glide Style

Approx. Ext. Dim
- 48"x 9.5"x 20.25"
- 40 lbs.

CARPET

19" MIXER DJ COFFIN

CDJ19E

- Holds A 19" Rack Mountable DJ Mixer & 2 Turntables In Standard Position

Approx. Ext. Dim
- 52"x 8"x 16"
- 48 lbs.

CARPET

2 SPACE AMP RACK
CRE02
- 2U

Approx. Ext. Dim
- 21"x 6"x 20"
- 23 lbs.

CARPET

4 SPACE AMP RACK
CRE04
- 4U

Approx. Ext. Dim
- 21"x 9.5"x 20"
- 26 lbs.

CARPET

6 SPACE AMP RACK
CRE06
- 6U

Approx. Ext. Dim
- 21"x 13"x 20"
- 30 lbs.

CARPET

8 SPACE AMP RACK
CRE08
- 8U

Approx. Ext. Dim
- 21"x 16.5"x 20"
- 33 lbs.

CARPET

10 SPACE AMP RACK
CRE10
- 10U

Approx. Ext. Dim
- 21"x 20"x 20"
- 38 lbs.

CARPET

12 SPACE AMP RACK
CRE12
- 21"x 25.5"x 20"
- 45 lbs.

CRE12W
- 21"x 28.5"x 20"
- 53 lbs.

- Carpeted Cases
- 12U

CARPET

14 SPACE AMP RACK
CRE14
- 21"x 28.5"x 20"
- 50 lbs.

CRE14W
- 21"x 32"x 20"
- 58 lbs.

- Carpeted Cases
- 14U

CARPET

16 SPACE AMP RACK
CRE16
- 21"x 28.5"x 20"
- 50 lbs.

CRE16W
- 21"x 32"x 20"
- 58 lbs.

- Carpeted Cases
- 16U

CARPET

18 SPACE AMP RACK
CRE18
- 21"x 35.5"x 20"
- 60 lbs.

CRE18W
- 21"x 39"x 20"
- 68 lbs.

- Carpeted Cases
- 18U

CARPET

2 SPACE PRO AMP RACK
CRP02
- 2U

Approx. Ext. Dim
- 21"x 7.5"x 22"
- 29 lbs.

CARPET

4 SPACE PRO AMP RACK
CRP04
- 4U

Approx. Ext. Dim
- 21"x 10.5"x 22"
- 33 lbs.

CARPET

6 SPACE PRO AMP RACK
CRP06
- 6U

Approx. Ext. Dim
- 21"x 14"x 22"
- 34 lbs.

CARPET

8 SPACE PRO AMP RACK

CRP08
- 21"x 17.5"x 22"
- 42 lbs.
- 8U

CRP08W (w/Wheels)
- 21"x 21.5"x 22"
- 48 lbs.
- 8U

CARPET

10 SPACE PRO AMP RACK

CRP10
- 21"x 21"x 22"
- 47 lbs.
- 10U

CRP10W (w/Wheels)
- 21"x 25"x 22"
- 47 lbs.
- 10U

CARPET

14 SPACE PRO AMP RACK W/WHEELS

CRP14W (w/Wheels)
- 14U

Approx. Ext. Dim
- 21"x 32.5"x 22"
- 65 lbs.

CARPET

16 SPACE PRO AMP RACK W/WHEELS

CRP16W (w/Wheels)
- 16U

Approx. Ext. Dim
- 21"x 36.5"x 22"
- 70 lbs.

CARPET

18 SPACE PRO AMP RACK

CRP18
- 21"x 35.5"x 20"
- 60 lbs.
- 18U

CRP18W (w/Wheels)
- 21"x 40"x 22"
- 78 lbs.
- 18U

CARPET

10 x 3 SPACE PRO COMBO RACK CASE

PRO103
- 10U Top Rack & 3U Bottom Rack

Approx. Ext. Dim
- 21"x 17.5"x 20"
- 42 lbs.

CARPET

10 x 8 PRO COMBO RACK

PRO108
- Carpeted Cases
- 10U Top Rack & 8U Bottom Rack

Approx. Ext. Dim
- 21"x 26"x 20"
- 55 lbs.

CARPET

13 x 3 PRO COMBO RACK

PRO133
- 13U Top Rack & 3U Bottom Rack

Approx. Ext. Dim
- 21"x 23"x 24"
- 50 lbs.

CARPET

13 x 6 PRO COMBO RACK

PRO136
- 13U Top Rack & 6U Bottom Rack

Approx. Ext. Dim
- 21"x 27"x 24"
- 50 lbs.

CARPET

9 x 2 SPACE COMBO RACK

CXC902
- 9U Top Rack & 2U Bottom Rack

Approx. Ext. Dim
- 21"x 15.5"x 18"
- 37 lbs.

CARPET

9 x 4 SPACE COMBO RACK

CXC904
- 9U Top Rack & 4U Bottom Rack

Approx. Ext. Dim
- 21"x 19"x 18"
- 42 lbs.

CARPET

9x6 SPACE COMBO RACK

CXC906
- 9U Top Rack & 6U Bottom Rack

Approx. Ext. Dim
- 21"x 19"x 18"
- 42 lbs.

CARPET

9 x 8 SPACE COMBO RACK

CXC908
- 9U Top Rack & 8U Bottom Rack

Approx. Ext. Dim
- 21"x 26"x 18"
- 50 lbs.

CARPET

10 x 16 SPACE COMBO RACK

CXC1016W
- 10U Top Rack & 16U Bottom Rack

Approx. Ext. Dim
- 21"x 42"x 18"
- 78 lbs.

CARPET

11x 6 SPACE COMBO RACK

CXP1106
- 11U Top Rack & 6U Bottom Rack

Approx. Ext. Dim
- 22"x 23"x 22"
- 52 lbs.

CARPET

11x 8 SPACE COMBO RACK

CXP1108
- 22"x 27"x 22"
- 57 lbs.
- 11U Top Rack & 8U Bottom Rack

CXP1108W (w/Wheels)
- 22"x 31"x 22"
- 65 lbs.
- 11U Top Rack & 8U Bottom Rack

CARPET

11x12 SPACE COMBO RACK

CXP1112
- 22"x 34"x 22"
- 67 lbs.
- 11U Top Rack & 12U Bottom Rack

CXP1112W (w/Wheels)
- 22"x 38"x 22"
- 72 lbs.
- 11U Top Rack & 12U Bottom Rack

CARPET

11x14 SPACE COMBO RACK

CXP1114W
- 11U Top Rack & 14U Bottom Rack

Approx. Ext. Dim
- 22"x 41.75"x 22"
- 82 lbs.

CARPET

11x16 SPACE COMBO RACK

CXP1116W

- 11U Top Rack & 16U Bottom Rack

Approx. Ext. Dim
- 22"x 44.25"x 22"
- 88 lbs.

CARPET

11x18 SPACE COMBO RACK

CXP1118W

- 11U Top Rack & 18U Bottom Rack

Approx. Ext. Dim
- 21"x 49"x 22"
- 95 lbs.

CARPET

11x14 SPACE SLIDE STYLE COMBO RACK

CS4800

- 8U Slanted Rack Mixer Space, 4U Top Rack Space

Approx. Ext. Dim
- 21"x 15"x 17.5"
- 36 lbs.

CARPET

8 x4 x12 SPACE COMBO RACK W/ WHEELS

CS4812W

- 8U Slanted Center Rack With 4U Top & 12U Bottom Vertical Racks

Approx. Ext. Dim
- 22"x 45"x 22"
- 97 lbs.

CARPET

2 x8 x2 SPACE SLIDE STYLE COMBO RACK W/LAPTOP COMPARTMENT

CSL2802

- Carpeted Cases
- 8U Slanted Rack Mixer Space And 2U Top & Bottom Vertical Racks

Approx. Ext. Dim
- 22"x 25"x 18"
- 51 lbs.

CARPET

8 SPACE STUDIO RACK

CRS08
- 8U

Approx. Ext. Dim
- 21"x 19"x 12"
- 28 lbs.

CARPET

12 SPACE STUDIO RACK

CRS12
- 12U

Approx. Ext. Dim
- 21"x 25"x 13"
- 36 lbs.

CARPET

14 SPACE STUDIO RACK W/ WHEELS

CRS14W
- 14U

Approx. Ext. Dim
- 21"x 33"x 16"
- 50 lbs.

CARPET

20 SPACE STUDIO RACK W/ WHEELS

CRS20W
- 20U

Approx. Ext. Dim
- 21"x 42.5"x 16"
- 56 lbs.

CARPET

24 SPACE STUDIO RACK W/ WHEELS

CRS24W
- 24U

Approx. Ext. Dim
- 21"x 50"x 16"
- 65 lbs.

CARPET

30 SPACE STUDIO RACK W/ WHEELS

CRS30W
- 30U

Approx. Ext. Dim
- 21"x 60"x 16"
- 72 lbs.

CARPET

7" RECORD CASE HOLDS 200 LP'S

C45200

- Holds 200 7"/45 RPM Vinyl Records

Approx. Ext. Dim
- 24.5"x 7.25"x 17
- 20 lbs.

CARPET

12" RECORD CASE HOLDS 90 LP'S

CLP090E

- Holds 90 12"/ LP Vinyl Records

Approx. Ext. Dim
- 15"x 15"x 14
- 16 lbs.

CARPET

12" RECORD CASE HOLDS 100 LP'S

CLP100P

- Holds 100 12"/ LP Vinyl Records

Approx. Ext. Dim
- 14.5"x 14"x 14
- 18 lbs.

CARPET

12" RECORD CASE HOLDS 180 LP'S

CLP180E

- Holds 180 12"/ LP Vinyl Records

Approx. Ext. Dim
- 28"x 14"x 12
- 32 lbs.

CARPET

12" RECORD CASE HOLDS 200 LP'S

CLP200P

- Holds 200 12"/ LP Vinyl Records

Approx. Ext. Dim
- 28"x 14"x 14.5
- 35 lbs.

CARPET

12" RECORD CASE HOLDS 260 LP'S W/ STORAGE COMPARTMENT & WHEELS

CLP260P

- Holds 260 12"/ LP Vinyl Records

Approx. Ext. Dim
- 35.5"x 15"x 18
- 50 lbs.

CARPET

225 CD CASE

CCD225E

- Holds 75 jewel cases or 225 view packs

Approx. Ext. Dim
- 19"x 7"x 12
- 13 lbs.

CARPET

300 CD CASE

CCD300E

- Holds 100 jewel cases or 300 view packs

Approx. Ext. Dim
- 24.5"x 7.25"x 12.75
- 15 lbs.

CARPET

300 CD CASE

CCD300P

- Holds 100 jewel case or 300 view pack CDs

Approx. Ext. Dim
- 24"x 7"x 13"
- 18 lbs.

CARPET

320 CD CASE

CCD320PW

- Holds 320 Jewel cases

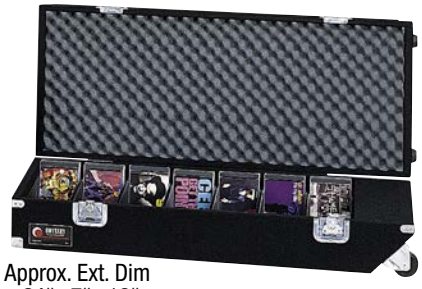

Approx. Ext. Dim
- 24"x 7"x 13"
- 18 lbs.

CARPET

450 CD CASE

CCD450P

- Holds 150 jewel cases or 450 view packs

Approx. Ext. Dim
- 24.5"x 7"x 14
- 22 lbs.

CARPET

450 CD CASE

CCD450E

- Holds 150 jewel cases or 450 view packs

Approx. Ext. Dim
- 24.5"x 7.25"x 17
- 20 lbs.

CARPET

serato
The power of music

SERATO DJ PRO
Upgrades Serato Lite software to Serato Pro version; unlocks Pro features with ability to use Serato expansions and more.

SERATO PLAY
Serato offline player; use Serato without controller; perfect backup rig.

SERATO VIDEO
Adds video and karaoke capabilities to Serato DJ PRO; manipulate video playback, video effects and custom text and images to your video mix.

SERATO FX KIT
Complete set of over 45 iZotope effects (Back Pack, Chip Pack, Jet Pack and Wolf Pack).

SERATO FLIP
Record cue point actions to create custom tracks edits; record your edits, automation, cue point and censor actions right to the track; retrigger up to 6 edits per track at will.

SERATO PITCH 'N TIME DJ
Industry standard time-stretching and pitch-shifting for Serato DJ PRO; key shifting and key lock that allows you to speed up or slow down your track to extreme tempo values while maintaining its key perfectly.

SERATO DVS
Add turntables or CDJ control to selected Serato gear; expand your DJ controller setup to use turntables with Serato vinyl or CDs.

SERATO DJ TOOL KIT
3-Pack Serato Expansion, includes Serato Flip, Serato Pitch 'n Time and Serato FX Kit.

SERATO DJ CLUB KIT
Serato software interface, includes Serato DJ and Serato DVS for selected DJ mixers.

SERATO DJ SUITE
Complete Serato software! All Serato add-ons and expansion packs in one. (Excludes iOS products.)

SERATO SAMPLE
Powerful and intuitive sample plugin for producers that allows you to quickly find, chop, key shift and time-stretch samples; powered by Pitch 'n Time.

SERATO PITCH 'N TIME PRO
High quality time-stretching and pitch-shifting for professionals, and pitch-shifting AudioSuite software plug-in for the Pro Tools platform.

SERATO PITCH 'N TIME LE
High quality time-stretching and pitch-shifting for professionals, and pitch-shifting software plug-in for Pro Tools and Logic Pro platforms.

ODYSSEY®
LEADING THROUGH INNOVATION

SERATO'S SOFTWARE

Products are available in two (2) different options:

There is a variety of very cool and powerful software programs to choose from in both options, providing the ultimate creativity and versatility to manipulate your music, while others add special effects and another that allows play, record and edit of music videos. And there is yet another called SUITE, which combines the entire Serato list of available programs all-in-one.

Scratch Card (SC)

The **"Scratch Card"** (SC) is a physical item that looks just like an ordinary credit card and is sold by authorized Serato dealers. It has a special "Access Code" on it, and you, as the customer, would then visit Serato's website and type the code into a field, and the program will automatically load onto your computer.

Digital Download (DL)

The **"Download License"** (DL) is not a physical product like the card. It is an immediate download, which means when you make your purchase of it from the Serato dealer, the dealer then contacts us (Odyssey) and we email the dealer a PDF (that contains the Access Code), and then, the dealer emails it to you and view the Access Code (just like the Card). And also just like when the Card is purchased, you would then go to Serato's site to type in the code to receive the program. This entire transaction is done electronically. You do not even have to visit the dealer in person to purchase the product.

Either way, you are purchasing the world's greatest music software programs!

ODYSSEY®
LEADING THROUGH INNOVATION

SERATO PERFORMANCE SERIES
12" CONTROL VINYL
Pair of 12" NoiseMap Control Tone Vinyl Records for Serato DJ Pro with DVS Expansion pack

RED PURPLE PINK GREEN YELLOW BLUE GLOW IN THE DARK CLEAR BLACK

SERATO PERFORMANCE SERIES
10" CONTROL VINYL
Pair of 10" NoiseMap Control Tone Vinyl Records for Serato DJ Pro with DVS Expansion pack

BLUE GLOW IN THE DARK CLEAR BLACK

SERATO PERFORMANCE SERIES
7" CONTROL VINYL
Pair of 7" NoiseMap Control Tone Vinyl Records for Serato DJ Pro with DVS Expansion pack

BLUE GLOW IN THE DARK CLEAR BLACK

SERATO OFFICIAL CONTROL CD
Pair of 7" NoiseMap Control Tone Vinyl Records for Serato DJ Pro with DVS Expansion pack - B

SERATO DJ PRO SOFTWARE

4-Deck DJ Software with built-in sample player, effects, and iOS remote support MAC/PC

SERATO DJ PRO SUITE

4-Deck DJ Software with built-in sample player, effects, and all expansion packs MAC/PC

SERATO DJ PRO CLUB KIT

Software bundle with Serato DJ Pro and Serato DJ DVS expansion pack

SERATO PITCH N' TIME DJ EXPANSION PACK FOR SERATO DJ PRO

Time-Stretching/Pitch Expansion for Serato DJ Pro - MAC/PC

SERATO FX EXPANSION PACK FOR SERATO DJ PRO

Bundle of 4 FX packs 945 + iZotope Effects) for Serato DJ Pro

SERATO VIDEO EXPANSION PACK FOR SERATO DJ PRO

2-deck Video Mixing Plug-in for Serato DJ Pro Software - MAC / PC

SERATO DJ DVS EXPANSION PACK FOR SERATO DJ PRO

DVS NoiseMap control vinyl/disc expansion for Serato DJ Pro

SERATO PLAY- Expansion for Serato DJ Lite

DJ Software for Mac / Pc

SERATO 12" **BUTTER RUG SLIPMAT** - BLACK (pair)

12" Low-fiction synthetic turntable slipmats with Serato Logo - Black (pair)

SERATO 12" **BUTTER RUG SLIPMAT** - WHITE (pair)

12" Low-fiction synthetic turntable slipmats with Serato Logo - White (pair)

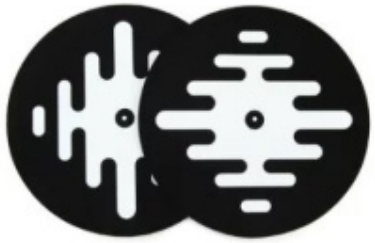

SERATO **PRO LOGO SLIPMAT** - BLACK

12" Felt turntable slipmat - Black

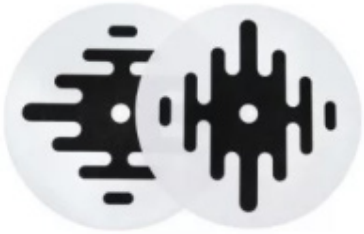

SERATO **PRO LOGO SLIPMAT** - WHITE

12" Felt turntable slipmat - White

ULTIMATE LP & CD TREATMENT

IT'S WHAT EVERY TURNTABLE DJ NEEDS

Gruv-Glide is a dry record treatment that actually improves the sound (fidelity) of the record. Prior to its development, even the highest quality cartidge could not produce the maximum available sound reproduction from the record. Gruv-Glide not only increases the fidelity of the record, but also reduces surface noise, removes static, and cleans the record. As a result of the treatment, the treated record and cartridge stylus will last longer due to the icreased tracking ability and reduced friction. One application last for an indefinite period of time.

www.GruvGlide.com

10" FORMAT DJ MIXER CARRYING CASE
K10MIXBL

Black Krom

Approx. Ext. Dim
- 14"x 7.75"x 20.25"
- 10 lbs.

BLACK KROM

1200 STYLE TURNTABLE CARRYING CASE
K1200BL

Black Krom

Approx. Ext. Dim
- 20"x 7.25"x 17.75"
- 10 lbs.

BLACK KROM

12" LARGE FORMAT / DJ MIXER / CDJ/ MEDIA CASE
K12MIXCDJBL

Black Krom

Approx. Ext. Dim
- 16"x 7.75"x 20.25"
- 11 lbs.

BLACK KROM

15.75"x13.5"x 3.5"(int.) EXTRA SMALL CARRYING CASE FOR DJ CONTROLLERS AND SIMILAR GEAR
KDJC1BL

Black Krom

Approx. Ext. Dim
- 18.25"x 7.25"x 17.5"
- 10 lbs.

BLACK KROM

19.75"x 13.5"x 4"(int.) SMALL CARRYING CASE FOR DJ CONTROLLERS AND SIMILAR GEAR
KDJC2BL

Black Krom

Approx. Ext. Dim
- 21.75"x 7.25"x 18.5"
- 13 lbs.

BLACK KROM

23.75"x 13.5"x 3"(int.) MEDIUM CARRYING CASE FOR DJ CONTROLLERS AND SIMILAR GEAR
KDJC3BL

Black Krom

Approx. Ext. Dim
- 25.5"x 7.75"x 18.25"
- 15 lbs.

BLACK KROM

7" CASE HOLDS 60 RECORDS
K45060BL
- Detachable Lid
- Holds 60 7" vinyl records

Black Krom

Approx. Ext. Dim
- 8.75"x 9.5"x 9.25"
- 5 lbs.

BLACK KROM

12" RECORD CASE HOLDS 70 LP'S
KLP70BL
- Holds approx: 70 12"/ LP vinyl records

Black Krom

Approx. Ext. Dim
- 14.75"x 14.5"x 11"
- 8 lbs.

BLACK KROM

11"x 5.5"x 8.25"(int.) PRO HEADPHONE / UTILITY CARRYING CASE
KUHPBL
- 2 adjustable dividers for up to three interior compartments
- egg foam

Black Krom

Approx. Ext. Dim
- 12"x 6.5"x 9.25"
- 4 lbs.

BLACK KROM

7" CASE HOLDS 120 RECORDS

K45120BLK
K45120SIL
- Holds 120 Records

Standard
Silver/Silver

Approx. Ext. Dim
- 17.25"x 9.75"x 9.25"
- 6 lbs.

KROM

12" RECORD CASE HOLDS 70 LP'S

KLP1BLK
KLP1SIL
- Holds 70 12" Vinyl Records & LPs

Standard
Silver/Silver

Approx. Ext. Dim
- 14"x 5.75"x 15.5"
- 4 lbs.

KROM

12" RECORD CASE HOLDS 70 LP'S
WITH RECESSED HANDLE

KLP2BLU
KLP2RED
KLP2SIL
KLP2BLK
- Stackable Cases
- Holds 70 12" Vinyl Records & LPs

Blue/Silver
Red/Silver
Standard
Silver/Silver

Approx. Ext. Dim
- 14"x 5.75"x 15.5"
- 4 lbs.

KROM

200 VIEWPACK / 65 JEWEL CD CASE

KCD200DIA
KCD200BLK
KCD200SIL
- 3-row interior holds approx. 200 cd's in viewpacks or 65 CDs in jewel cases

Standard
Silver/ Silver
Diamond Plate

Approx. Ext. Dim
- 18"x 9"x 11"
- 9 lbs.

KROM

300 VIEWPACK / 100 JEWEL CD CASE

KCD300DIA
KCD300BLK
- 3-row interior holds approx. 300 cd's in viewpacks or 100 CDs in jewel cases

Standard
Diamond Plate

Approx. Ext. Dim
- 14"x 5.75"x 15.5"
- 4 lbs.

KROM

600 VIEWPACK / 200 JEWEL CASE CD CASE

KCD600BLK
- 4-row interior holds approx. 600 CDs in viewpacks or 200 CDs in jewel cases

Standard

Approx. Ext. Dim
- 24"x 8"x 24.5"
- 17 lbs.

KROM

HOLDS 2 TURNTABLE NEEDLE CARTRIDGES PRO2 CASE

KCC2PR2BL
KCC2PR2SL
KCC2PR2SD
- Holds 2 turntable needle cartridges plus spare styli

Standard
Silver/ Silver
Diamond Plate

Approx. Ext. Dim
- 5.5"x 2.13"x 4.5"
- .55 lbs.

KROM

HOLDS 4 TURNTABLE NEEDLE CARTRIDGES PRO2 CASE

KCC4PR2BL
KCC4PR2SL
KCC4PR2SD
- Holds 4 turntable needle cartridges plus spare styli

Standard
Silver/ Silver
Diamond Plate

Approx. Ext. Dim
- 5.5"x 2.13"x 4.5"
- .55 lbs.

KROM

WATER TIGHT, DUST PROOF, IMPACT RESISTANT UTILITY CARRYING CASE

VUXS2

Approx. Ext. Dim
- 9.25"x 2.5"x 5.25"
- .05 lbs.

VULCAN SERIES

BACKSPIN II

DIGITAL GEAR BACKPACK

BACKSPIN2CAM (GREEN CAMO)
BACKSPIN2GYC(GRAY CAMO)

WE HAVE YOU COVERED WITH BAGS FOR ALL YOUR GIGS

REMIXMK2™ SERIES

THE NEW STANDARD IN
MOBILE REMIXING

BRXMK2BP10CAM (GREEN CAMO)
BRXMK2BP10GYC (GREY CAMO)

STREAMLINE™

THE NEW STANDARD IN DJ GEAR PROTECTION

FLOW TO YOUR NEXT GIG
WITH OUR NEW COMPACT CONTOUR
CONTROLLER BAGS

BMSLDJCS
BMSLDJCM
BMSLDJCL
BMSLDJCXL

*For the safety of your equipment proper protective cases/pouches for each individual gear (laptops, tablets, folding laptop/gear stands, power sources and cables, etc, are required when transporting them together within the same compartment. Stay within the molded bag's capacity to ensure the best protection for your gear.

DIGITAL GEAR DJ BACKPACK
BACKSPIN2CAM
BACKSPIN2GYC

Approx. Ext. Dim
- 19"x 20"x 13"
- 6 lbs.

DIGITAL GEAR BACKPACK
BRXMK2BP10CAM
BRXMK2BP10GYC

Approx. Ext. Dim
- 14.5"x 19"x 8.5"
- 2 lbs.

Convenient Pockets to hold Cables, hard drives, USB hubsUSB drives etc...

*Gear not included with bags

"CONTROL" DIGITAL DJ GEAR TROLLEY BAG
BRXMK2CTRLW

Approx. Ext. Dim
- 15.5"x 26.5"x 41.25"x11"
- 9 lbs.

DIGITAL GEAR BACKPACK LARGE SIZE
BRXMK2BP12

Approx. Ext. Dim
- 16.5"x 21"x 9.5"
- 3 lbs.

DIGITAL GEAR BACKPACK STANDARD SIZE
BRXMK2BP10

Approx. Ext. Dim
- 13"x 19"x 7"
- 2 lbs.

DIGITAL GEAR DJ BACKPACK
BRLBACKSPIN2

Approx. Ext. Dim
- 19"x 20"x 13"
- 6 lbs.

DJ ACCESSORY ORGANIZER
BRLDJA
- Redline™ Series

Approx. Ext. Dim
- 14.5"x 12"x 6"
- 3 lbs.

MOBILE TRIPOD TRUSS SYSTEM WHEELED TOTE BAG
BRLTMTSW

Approx. Ext. Dim
- 66"x 10.5"x 12.5"
- 9 lbs.

DJ CONTROLLER CARRY BAG
BRLNVC

Approx. Ext. Dim
- 23.75"x 17.5"x 3.5"
- 3 lbs.

DIGITAL MEDIA CONTROLLER / MIXER BAG
BRLDIGITAL

Approx. Ext. Dim
- 19"x 15.5"x 8"
- 6 lbs.

EXTRA LARGE DJ CONTROLLER AND MEDIA BAG, ADDITIONAL CARRY BAG
BRLDIGITALXL

Approx. Ext. Dim
- 19"x 15.5"x 8"
- 6 lbs.

EXTRA LARGE DJ CONTROLLER AND MEDIA BAG
BRLDIGITALXLE
- No Small Bag Included

Approx. Ext. Dim
- 19"x 15.5"x 8"
- 6 lbs.

2XL DJ CONTROLLER AND MEDIA BAG
BRLDIGITAL2XL

Approx. Ext. Dim
- 28"x 14"x 5.5"
- 4 lbs.

3XL DJ CONTROLLER AND MEDIA BAG
BRLDIGITAL3XL

Approx. Ext. Dim
- 28"x 14"x 5.5"
- 4 lbs.

UTILITY SHUTTLE BAG WITH PULLOUT HANDLE & WHEELS
BRLUT1HW
- 21" X 16" X 12" Interior

Approx. Ext. Dim
- 17"x 26-39.75"x 16"
- 10 lbs.

UTILITY / PAR / UPLIGHT GEAR BAG WITH PULLOUT HANDLE & WHEELS
BRLPAR1HW

Approx. Ext. Dim
- 31.5"x 15"x 20"
- 14 lbs.

15" MOLDED SPEAKER BAG WITH PULLOUT HANDLE & WHEELS FOR MEDIUM TO LARGE SPEAKERS
BRLSPKLHW

Approx. Ext. Dim
- 18.5"x 31.25-45.5"x 16"
- 9 lbs.

12" MOLDED SMALL SIZE SPEAKER BAG
BRLSPKSM
- 27"x 15"x 17.25"
- 3 lbs.

15" MOLDED MEDIUM SIZE SPEAKER BAG
BRLSPKMD
- 31"x 15.5"x 21.5"
- 4 lbs.

BRLSPKLG
- 32"x 17.5"x 17.5"
- 4 lbs.

keep your speakers looking sharp at gigs

ROCK THE HARD SHELL!

The NEXT EVOLUTION in DJ BAGS

HAS FINALLY **ARRIVED**

Padded interior dividers to organize and protect your gear.

Convenient pockets to hold cables, hard drives, USB hubs USB drives etc...

Main compartment safety belt to secure your DJ Gear in place.

Dedicated laptop compartment

*Gear not included with bags

Our New Line of Hard Shell Backpacks are the NEXT EVOLUTION in DJ gear protection today! When you're on-the-go, take your most essential DJ gear with you using Odyssey's NEW Hard Shell DJ backpacks, designed to provide your gear with the ultimate protection. Our BHS12BP backpack comes with multiple compartments, pockets, and pouches to easily store equipment and other DJ essentials such as a 12" format DJ mixer, portable turntable, laptop, compact DJ controller, Bluetooth speakers, microphones, cables, hard drives, headphones, and much more! The BHS12BP is padded in all the right places for ultra comfort during your daily DJ activities and for the ultimate mobility protection of your DJ gear.

DIGITAL GEAR BACKPACK

BHS12BPBLK
BHS12BPCHA

Approx. Ext. Dim
- 18"x 12.5"x 9"
- 2.6 lbs.

SOFT UTILITY "DIGI"POUCH FOR DIGITAL GEAR ACCESSORIES

BDIGI

Approx. Ext. Dim
- 8.75"x 2.75"x 7.5"
- 1 lbs.

UTILITY HEADPHONE / GEAR POUCH

BHP

Approx. Ext. Dim
- 7.5"x .25"x 9.5"
- 1 lbs.

THUMB DRIVE UTILITY POUCHES

BTDP2
- Dual Pocket Thumb Drive Pouch w/ Key Chain Hook
- 3.5"x 1.75"x .5"
- .04 lbs.

BTDP6
- Six Pocket Thumb Drive Utility Pouch
- 5.5"x 3.75"x 1.25"
- 0.15 lbs.

DENON PRIME 4 DJ CONTROLLER CARRYING BAG

BMSLPRIME4

Approx. Ext. Dim
- 33"x 21"x 7.5"
- 8 lbs.

STREEMLINE

DENON MC7000 DJ CONTROLLER EVA MOLDED CARRYING BAG

BMSLDNMC7000

Approx. Ext. Dim
- 30.25"x 18.25"x 5"
- 5 lbs.

STREEMLINE

NUMARK DJ2GO2 DJ CONTROLLER CARRYING BAG

BMSNUDJ2GO2
- Holds The NUMARK DJ2GO2 and Gear Of Similar Size Or Smaller

- 14.25"x 1.75"x 7.75"
- 1 lbs.

STREEMLINE

PIONEER DDJ-400 DJ CONTROLLER EVA MOLDED CARRYING BAG

BMSLDDJ400
- STREEMLINE™ Series

- 22.5"x 14.5"x 5"
- 4 lbs.

STREEMLINE

PIONEER DDJ-1000 DJ CONTROLLER EVA MOLDED CARRYING BAG

BMSLDDJ1000
- STREEMLINE™ Series

- 30.25"x 18.25"x 5"
- 5 lbs.

STREEMLINE

RANE TWELVE EVA MOLDED CARRYING BAG

BMSRANE12TOUR

Approx. Ext. Dim
- 18"x 6.25"x 21.5"
- 6 lbs.

STREEMLINE

RANE SEVENTY-TWO / PIONEER DJM-S9 EVA MOLDED TOUR PRO SERIES CARRYING BAG

BMSRANE72TOUR

Approx. Ext. Dim
- 14.75"x 6.25" x 22.5"
- 5 lbs.

STREEMLINE

RANE SEVENTY-TWO CARRYING BAG

BMSRANE72
- Sleek Reinforced Stitched EVA Molded Shell Design

Approx. Ext. Dim
- 20"W x 13.75"H x 5"D
- 3 lbs.

STREEMLINE

ROLAND DJ-707M MOLDED BAG

BMSLRODJ707M

Approx. Ext. Dim
- 22.5"x 5"x 14.5"
- 4 lbs.

STREEMLINE

ROLAND DJ-808 SERATO DJ CONTROLLER EVA MOLDED CARRYING BAG

BMSLRODJ808
- STREEMLINE™ Series

- 30.25"x 18.25"x 5"
- 5 lbs.

STREEMLINE

TRAKTOR S2 MK3 DJ CONTROLLER EVA MOLDED CARRYING BAG

BMSLTKS2MK3
- STREEMLINE™ Series

- 22.5"x 14.5"x 5"
- 4 lbs.

STREEMLINE

15.5"x 14.5" x 2"(int.) EVA MOLDED UNIVERSAL UTILITY CARRYING BAG

BMS161502F
- Holds The Ableton Push 2 And Gear Of Similar Size Or Smaller
- Pluck foam interior

Approx. Ext. Dim
- 16.25"x 2.25"x 15.75"
- 2 lbs.

STREEMLINE

22.25" x 14.25" x 4.75"(int.)
SMALL UTILITY EVA MOLDED CARRYING DJ BAG
BMSUNI1
- Pluck foam interior

Approx. Ext. Dim
- 22.25"x 14.5"x 5"
- 5 lbs.

STREEMLINE

21.75"x 13"x 5.5"(int.)
MEDIUM UTILITY EVA MOLDED CARRYING DJ BAG
BMSUNI2
- Pluck foam interior

Approx. Ext. Dim
- 22.5"x 6.25"x 15"
- 5 lbs.

STREEMLINE

20.75" x 17" x 5.5"(int.)
LARGE UTILITY EVA MOLDED CARRYING DJ BAG
BMSUNI3
- Pluck foam interior

Approx. Ext. Dim
- 21.5"x 6.5"x 18"
- 6 lbs.

STREEMLINE

12"x 17"x 4.5"(int.)
UNIVERSAL UTILITY EVA MOLDED CARRYING DJ BAG
BMSPIDJMS9
- Holds The Pioneer DJM-S9 Mixer & Gear Of Similar Size
- Pluck foam interior

Approx. Ext. Dim
- 12.75"x 4.75"x 17.75"
- 3 lbs.

STREEMLINE

14.5"x 18"x 4.5"(int.)
UNIVERSAL UTILITY EVA MOLDED CARRYING DJ BAG
BMS12MIXCDJ
- Holds 12" Format Mixers, Large Format Media Players,and Gear Of Similar Size Or Smaller

Approx. Ext. Dim
- 18.25"x 4.75"x 15.5"
- 4 lbs.

STREEMLINE

22.25"x 14.25"x 4.75"(int.)
SMALL UNIVERSAL UTILITY EVA MOLDED CARRYING DJ BAG
BMSLDJCS
- Pluck foam interior

- 22.5"x 14.5"x 5"
- 4 lbs.

STREEMLINE

26.5"x 16.25"x 4.75" (int.)
MEDIUM UNIVERSAL UTILITY EVA MOLDED CARRYING DJ BAG
BMSLDJCM
- Pluck foam interior

- 30.25"x 18.25"x 5"
- 5 lbs.

STREEMLINE

30" x 18" x 4.75" (int.)
LARGE UNIVERSAL UTILITY EVA MOLDED CARRYING DJ BAG
BMSLDJCL
- Pluck foam interior

- 30.25"x 18.25"x 5"
- 5 lbs.

STREEMLINE

36" x 17.75" x 4.75"(int.)
EXTRA LARGE UNIVERSAL UTILITY EVA MOLDED CARRYING DJ BAG
BMSLDJCXL

- 36.25"x 18.5"x 5"
- 5 lbs.

STREEMLINE

31.75" x 19.75" x 6.5"(int.)
EXTRA LARGE XD 2 UNIVERSAL UTILITY EVA MOLDED CARRYING DJ BAG
BMSLDJCXD2

- 33"x 21"x 7.5"
- 8 lbs

STREEMLINE

37.5" X 19.75" X 6.75"
EXTRA LARGE XD 3 UNIVERSAL UTILITY EVA MOLDED CARRYING DJ BAG
BMSLDJCXD3

- 38"x 21"x 6.75"
- 8 lbs.

STREEMLINE

12" LP VINYL RECORD ORGANIZER
BMSLP1210

- 13.75" x 14" x 1.75"
- 2 lbs.

STREEMLINE

3U RACK BAG WITH 8 INCH INTERIOR DEPTH

BR308
- 3U

Odyssey rack bags allow for both front and rear access without removing the interior shell.

Approx. Ext. Dim
- 22"x 7"x 10"
- 10 lbs.

Our unique rack bags allow you to remove the interior hard shell from the padded bag so you can stack racks firmly on top of each other without the bag getting in the way! All rack bags include a shoulder strap along with a small bag of rack screws and washers.

The black carpet covered interior shell is studio furniture friendly - no rubber feet or metal edges to damage or mark surfaces.

3U RACK BAG WITH 12 INCH INTERIOR DEPTH

BR312
- 3U

Approx. Ext. Dim
- 22"x 14"x 7"
- 12 lbs.

3U RACK BAG WITH 16 INCH INTERIOR DEPTH

BR316
- 3U

Approx. Ext. Dim
- 22"x 17"x 7"
- 12 lbs.

4U RACK BAG WITH 8 INCH INTERIOR DEPTH

BR408
- 4U

Approx. Ext. Dim
- 22"x 9"x 10"
- 12 lbs.

4U RACK BAG WITH 12 INCH INTERIOR DEPTH

BR412
- 4U

Approx. Ext. Dim
- 22"x 9"x 14"
- 16 lbs.

4U RACK BAG WITH 16 INCH INTERIOR DEPTH

BR416
- 4U

Approx. Ext. Dim
- 22"x 9"x 18"
- 19 lbs.

5U RACK BAG WITH 12 INCH INTERIOR DEPTH

BR512
- 5U

Approx. Ext. Dim
- 22"x 10.5"x 14"
- 21 lbs.

5U RACK BAG WITH 16 INCH INTERIOR DEPTH

BR516
- 5U

Approx. Ext. Dim
- 22"x 10.5"x 18"
- 2 lbs.

21"x 24" FOLD-OUT STAND

CF2124

- Racks, Cases and Consoles

Approx. Ext. Dim
- 21"x 24"x 17.5"
- 26 lbs.

CARPET

21"x 28" FOLD-OUT STAND

CF2128

- Racks, Cases and Consoles

Approx. Ext. Dim
- 21"x 28"x 17.5"
- 28 lbs.

CARPET

26"x 36" FOLD-OUT STAND

CF2636

- Coffins, Consoles

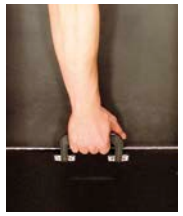

Approx. Ext. Dim
- 26"x 36"x 16"
- 32 lbs.

CARPET

36"x 30" FOLD-OUT STAND

CF3630

- Coffin, Consoles

Approx. Ext. Dim
- 36"x 30"x 17.5"
- 38 lbs.

CARPET

36"X 34" FOLD-OUT STAND

CF3634

- Coffin, Consoles

Approx. Ext. Dim
- 36"x 30"x 17.5"
- 38 lbs.

CARPET

48"X 48" FOLD-OUT STAND

CF4848

- Façade (no center shelf)

Approx. Ext. Dim
- 48"x 48"x 18.5"
- 35 lbs.

CARPET

60"x 48" FOLD-OUT STAND

CF6048

Approx. Ext. Dim
- 60"x 48"x 18.5"
- 35 lbs.

CARPET

48"x 20" ADJUSTABLE DJ TABLE WORK SURFACE CARPETED SERIES

CTBC2048

Approx. Ext. Dim
- 48"x 26-39"x 20"
- 26 lbs.

CARPET

60"x 20" ADJUSTABLE DJ TABLE WORK SURFACE CARPETED SERIES

CTBC2060

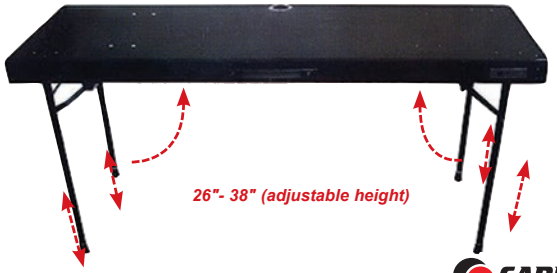

Approx. Ext. Dim
- 60"x 26-39"x 20"
- 29 lbs.

CARPET

21"x 36" FOLD-OUT STAND

FFX2F2136BL
- Flight FX™ Series

Black Label

Approx. Ext. Dim
- 21.5"x 36.75"x 18"
- 40 lbs.

FLIGHT FX™

26"x 36" FOLD-OUT STAND

FFX2F2636BL
- Flight FX™ Series

Black Label

Approx. Ext. Dim
- 26.5"x 36.75"x 21"
- 35 lbs.

FLIGHT FX™

33"x 36" FOLD-OUT STAND

FFX2F3336BL
- Flight FX™ Series

Black Label

Approx. Ext. Dim
- 33.25"x 36.5"x 31.25"
- 48 lbs.

FLIGHT FX™

19"x 26" FOLD-OUT STAND

FZF1926
- Flight Zone®Series

Standard

Approx. Ext. Dim
- 19"x 30.5"x 3.5"
- 23.4 lbs.

FLIGHT ZONE®

19"x 30" FOLD-OUT STAND

FZF1930
FZF1930BL
- Flight Zone®Series

Standard

Black Label

Approx. Ext. Dim
- 19"x 30.5"x 3.5"
- 26 lbs.

FLIGHT ZONE®

21"x 36" FOLD-OUT STAND

FZF2136
FZF2136BL
- Flight Zone®Series

Standard

Black Label

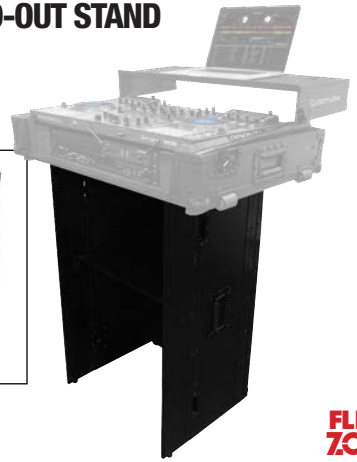

Approx. Ext. Dim
- 19"x 30.5"x 3.5"
- 26 lbs.

FLIGHT ZONE®

26"x 36" FOLD-OUT STAND

FZF2636
FZF2636BL
- Flight Zone®Series

Standard

Black Label

Approx. Ext. Dim
- 26"x 36"x 3.25"
- 30 lbs.

FLIGHT ZONE®

33"x 36" FOLD-OUT STAND

FZF3336
FZF3336BL
- Flight Zone®Series

Standard

Black Label

Approx. Ext. Dim
- 33.25"x 36.5"x 19.25"
- 39 lbs.

FLIGHT ZONE®

54"x 37" FOLD-OUT STAND

FZF5437T
FZF5437TBL
- Flight Zone®Series

Standard

Black Label

Approx. Ext. Dim
- 54"x 37"x 6"
- 54.4 lbs.

FLIGHT ZONE®

59"x 20" DIAMOND TEXTURED TOP WORK SURFACE DJ TRUSS TABLE

ATT

Approx. Ext. Dim
- 59.24"x 34"x 20"
- 43 lbs.

DJ TRUSS TABLE TOP

ATT2
- Each of the 3 table tops measure 18.5" x 19.5"each.

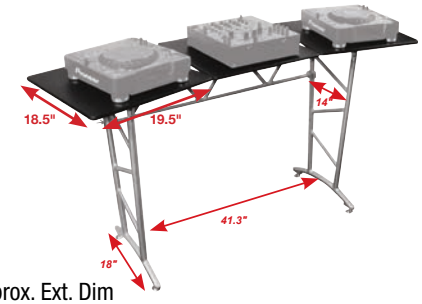

Approx. Ext. Dim
- 60"x 35.25"x 19.25"
- 44 lbs.

2 TIER COMBO PACK X-STANDS W/MIC BOOM & TOP SHELF

LTBXS2MTCP
LTBXS2MTCPWHT
- Dual Tier Heavy-Duty Folding Stand
- Microphone Boom And Laptop / Gear Shelf

Approx. Ext. Dim
- 16-34.5"x 33.75"- 54.25" x 23.75
- 26 lbs.

X-STAND 2 TIER DOUBLE BRACED HEAVY-DUTY

LTBXS2
LTBXS2WHT
- Ideal for DJ Coffins and Controller Cases

Approx. Ext. Dim
- 12-5"-37.25 x 18.75"- 38.2" x 22.5
- 21 lbs.

X-STAND DOUBLE BRACED HEAVY-DUTY

LTBXS
LTBXSWHT

Approx. Ext. Dim
- 41.5" x 16.5" x 4"
- 18 lbs.

LAPTOP/GEAR SHELF

LTBXS2CPTRAY
LTBXS2CPTRAYWHT
- Perfect for Odyssey 2 Tier X-Stands

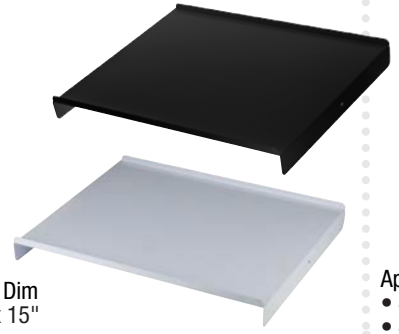

Approx. Ext. Dim
- 19" x 2" x 15"
- 4 lbs.

DOLLY PLATE 24" X 48" CARPETED SERIES

ADP2448C
- Fully Black Carpeted Top and Side Sufaces

Approx. Ext. Dim
- 48.25" x 6.75" x 24"
- 40 lbs.

DOLLY PLATE 21"x 24"

ADP30E
- Can Hold 300 lbs Max (evenly distributed)

Approx. Ext. Dim
- 21" x 4.5" x 24"
- 12 lbs.

DOLLY PLATE 21"x 24"

ADP30P

Approx. Ext. Dim
- 21" x 5" x 24"
- 15 lbs.

AMP RACK 20"x 23.5" CASTER BOARD

FZADP

Approx. Ext. Dim
- 20" x 5" x 23.5"
- 18 lbs.

FLIGHT ZONE®

COMBO RACK 20.5"x 24.5" CASTER BOARD

FZWMP

Approx. Ext. Dim
- 20.5" x 5.5" x 24.5"
- 18 lbs

FLIGHT ZONE®

L STAND TRAY AND STAND COMBO PACK

LSTANDCOMBO

Approx. Ext. Dim
- 10.5-13.5"x 9.5-14.5" x 12"
- 8 lbs.

L-STAND ULTRA 360 LAPTOP/TABLET QUICK SETUP FOLDING STAND

LSTAND360

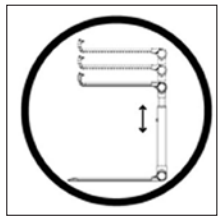

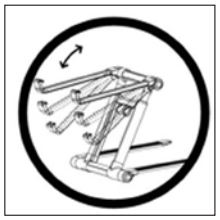

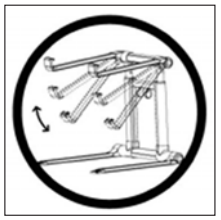

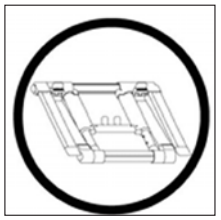

Approx. Ext. Dim
- 12.5"x 1.25" x 11.5"
- 2.1 lbs.

Multi-adjustable heights and operation positions

L STAND 360 ARTICULATING GEAR/ LAPTOP STAND

LSTAND360MACSIL
- SERIES IN MAC SILVER
  Foreign and U.S. Patents Pending

Approx. Ext. Dim
- 12.5"x 1.25" x 11.5"
- 2.1 lbs.

L STAND 360 ARTICULATING GEAR/ LAPTOP STAND

LSTAND360WHT
- SERIES IN WHITE
  Foreign and U.S. Patents Pending

Approx. Ext. Dim
- 12.5"x 1.25" x 11.5"
- 2.1 lbs.

L EVATION SINGLE TRAY GEAR STAND

LUNISP
- Adjustable depth can accomodate a laptop, most CD players, effect units or other pro gear

Approx. Ext. Dim
- 18.75"x 9" x 19.5"
- 38 lbs.

L EVATION DUAL TRAY GEAR STAND

LUNISPDB
- Adjustable support for your laptop, most CD players, effect units or other pro gear

Includes:
2 LUNIPLATES
1 LDBARM
1 L16POLE
1 LBASE

Approx. Ext. Dim
- 23"x 20" x 15"
- 57 lbs.

L EVATION TRIPLE TRAY GEAR STAND

L3UNI
- Adjustable support for your laptop, most CD players, effect units or other pro gear

L3UNI Includes:
1 LUNISP
2 LUNIPLATE
1 LDBARM
1 L20POLE

Approx. Ext. Dim
- 22"x 21" x 18"
- 66 lbs.

L EVATION GEAR STAND PARTS

LBASE

LDBARM

LUNIPLATE

L16POLE
L20POLE

MODEL	WEIGHT	DESCRIPTION:
LARM	4 lbs.	Accessory Dual Arm for L-EVATION* Stand
LBASE	15 lbs.	Base for L-Evation stand
LDBARM	6 lbs.	Accessory Dual Arm for L-EVATION* Stand
LUNIPLATE	7 lbs.	Universal Plate holds most Laptops, CD decks, Effect units, and Mixers.
L16POLE	5 lbs.	16" pole (standard pole for L-Evation stand)
L20POLE	6 lbs.	20" pole (five inches taller then the standard pole)

COMPACT COLOR CHANGING LED BACKLIT KEYBOARD WITH USB 3 PORT HUB

COLORKEY

- PC & Mac compatible
- 7 Color back LED lit keys great for visibility in any dark club environment.

Approx. Ext. Dim
- 12.625"x 0.375"-0.875" x 6.75"
- 1 lbs.

SERATO & TRAKTOR SCRATCH SHORTCUT KEYBOARD SKIN FOR THE "COLORKEY" COMPACT LED KEYBOARD

CONTROLSKIN

- Made for Color Key Keyboard

Approx. Ext. Dim
- 12.625"x 0.375"-0.875" x 6.75"
- 1 lbs.

CONTROL SL SERATO / TRAKTOR SCRATCH COMPACT COLOR CHANGING LED BACKLIT KEYBOARD W/USB 3 PORT HUB

FOREIGN AND US PATENT PENDING

CONTROLSL

- Made for Color Key Keyboard

Approx. Ext. Dim
- 12.625"x 0.375"-0.875" x 6.75"
- 1 lbs.

COMPACT COLOR CHANGING LED BACKLIT KEYBOARD KIT WITH USB 3 PORT HUB & "CONTROL SKIN"

CONTROLKIT

- Made for Color Key Keyboard

Approx. Ext. Dim
- 12.625"x 0.375"-0.875" x 6.75"
- 1 lbs.

L-STAND MOBILE FOLDING LAPTOP/GEAR STAND WITH TABLE/CASE CLAMPS

LSTANDBLU
LSTANDLIM

- Color Display Package

DESIGNER SERIES DJ

***COLORS FOR DESIGNER DJ™ SERIES L-STANDS & ACCESSORIES:**
Check with your local dealer for availability

Approx. Ext. Dim
- 10.5-13.5"x 9.5-14.5" x 12"
- 6 lbs.

LSTAND*
Includes LSTAND CLAMPS for table and case clamp configuration
(*See below for all available colors)

L-STAND CLAMPS CARBON FIBER TABLE/CASE DESIGNER DJ™ SERIES

LSTANDCLAMPS
LSTANDCLAMPSGRN
LSTANDCLAMPSLIM
LSTANDCLAMPSORG
LSTANDCLAMPSPNK
LSTANDCLAMPSYEL

- Pair of table / case clamps for L-Stands

Approx. Ext. Dim
- 12"x 12" x 5"
- 4 lbs.

DESIGNER SERIES DJ

L-STAND M MOBILE DESIGNER DJ™ SERIES

LSTANDM
LSTANDMYEL
LSTANDMGRN
LSTANDMLIM
LSTANDMNVY
LSTANDMPNK
LSTANDMPUR

- Folding L-Stand system with table/case clamps

Approx. Ext. Dim
- 16"x 14" x 3.5"
- 7 lbs.

DESIGNER SERIES DJ

L-STAND S DESIGNER DJ™ SERIES

LSTANDS
LSTANDSBLU
LSTANDSRED
LSTANDSWHT
LSTANDSGRN
LSTANDSMGY
LSTANDSPNK

- Stand alone table top laptop/gear stand
- Clamps Not Included

Approx. Ext. Dim
- 10.5"x 9.5-13.5" x 12"
- 3 lbs.

DESIGNER SERIES DJ

L-STAND TRAY DESIGNER DJ™ SERIES

LSTANDTRAY
LSTANDTRAYBLU
LSTANDTRAYGRN
LSTANDTRAYLIM
LSTANDTRAYPNK
LSTANDTRAYWHT
LSTANDTRAYYEL

- Ventilated adjustable tray for Serato Interface, hard drive or other gear

Approx. Ext. Dim
- 9-11.5"x 1.75" x 7.25"
- 2 lbs.

DESIGNER SERIES DJ

SHELF ACCESSORY FOR R8, R10, AND R12

ORSH10

- 8-in-1 Equipment Transporter

- 16 lbs.

ROCKNROLLER® MULTI-CARTS®

MULTI-CART ACCESSORY SHELF

ORSH10Q

- Transform your R8,R10, R11G or R12 cart into a mobile workstation

Approx. Ext. Dim
- 16"x 50"x 0.5"
- 9.6 lbs.

ROCKNROLLER® MULTI-CARTS®

RMH1 MINI HAND TRUCK

ORMH1

Approx. Ext. Dim
- 24"x 15"x 7"
- 9.6 lbs.

ROCKNROLLER® MULTI-CARTS®

R2RT MICRO 8-IN-1 EQUIPMENT TRANSPORTER

OR2RT - BL
OR2RT - GR
OR2RT - RD

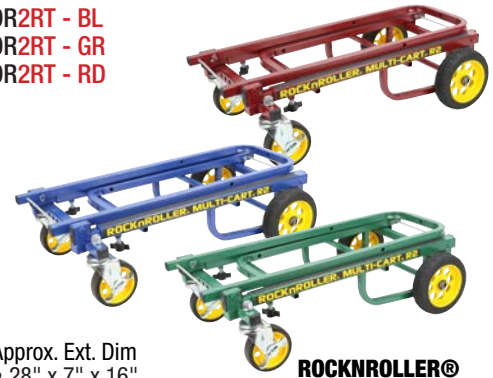

Approx. Ext. Dim
- 28" x 7" x 16"
- 22 lbs.

ROCKNROLLER® MULTI-CARTS®

R6 MINI 8-IN-1 EQUIPMENT TRANSPORTER

OR6RT

- 25 lbs.

ROCKNROLLER® MULTI-CARTS®

R8RT MIDI 8-IN-ONE EQUIPMENT MULTI-CART

OR8RT

- 29 lbs.

ROCKNROLLER® MULTI-CARTS®

R10RT MAX 8-IN-ONE EQUIPMENT MULTI-CART

OR10RT

Approx. Ext. Dim
- 36"x 10"x 20"
- 31 lbs.

ROCKNROLLER® MULTI-CARTS®

R12G MEGA GROUND GLIDER 8-IN-ONE EQUIPMENT MULTI-CART

OR12RT

Approx. Ext. Dim
- 37"x 10"x 20"
- 36 lbs.

ROCKNROLLER® MULTI-CARTS®

R14G MEGA GROUND GLIDER 8-IN-ONE EQUIPMENT MULTI-CART

OR14G

Approx. Ext. Dim
- 17"x 32"x 42-60"
- 36 lbs.

ROCKNROLLER® MULTI-CARTS®

R16RT GROUND GLIDER MAX 8-IN-ONE EQUIPMENT MULTI-CART

OR16RT

- 33 lbs.

ROCKNROLLER® MULTI-CARTS®

R18RT GROUND GLIDER MEGA 8-IN-ONE EQUIPMENT MULTI-CART

OR18RT

Approx. Ext. Dim
- 45" x 22" x 10"
- 38 lbs.

ROCKNROLLER® MULTI-CARTS®

SPEAKER STAND 6 FT HIGH

LTS1

- High quality aluminum/steel speaker tripod stand

LATSA1 (OPTIONAL)

Approx. Ext. Dim
- 55"x 7"x 6"
- 8.5 lbs.

SPEAKER STAND FEATURING ARTICULATING LEG - 6 FT HIGH

LTS1A

LTS1AWHT

- High quality aluminum/steel speaker tripod stand

Approx. Ext. Dim
- 48"x 7.25"x 6.5"
- 14 lbs.

SPEAKER STAND WITH WHEELS 6 FT HIGH

LTS1W

LTS1WHT

- High quality aluminum/steel speaker tripod stand with wheels

LATSA1 (OPTIONAL)

Approx. Ext. Dim
- 48"x 7.25"x 6.5"
- 14 lbs.

DUAL SPEAKER STAND SET WITH CARRYING BAG

LTS2X2B

- Dual Speaker Tripod Stand Pack

Approx. Ext. Dim
- 41"x 4"x 7.5"
- 13 lbs.

CRANK STAND TRIPOD WITH TOP 4 FT T-BAR 8 FT HIGH

LTP8PRO

- Top T-Bar with support bars

Approx. Ext. Dim
- 55"x 9"x 6"
- 19 lbs.

SPEAKER STAND TRIPOD WITH ARTICULATING CRANK-UP 8.5 FT HIGH

LTS1APRO

LTS1APROWHT

- Black high quality aluminum/steel speaker tripod stand

Approx. Ext. Dim
- 55"x 7"x 6"
- 8.5 lbs.

SPEAKER STAND TRIPOD 9 FT HIGH

LTS2

- Black high quality aluminum/steel speaker tripod stand

Approx. Ext. Dim
- 55"x 7"x 6"
- 8.5 lbs.

SPEAKER CRANK-UP EXTENSION POLE

ASCE42

ASCE42WHT

- Top T-Bar with support bars

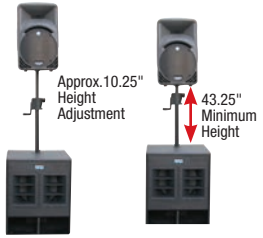

Approx. Ext. Dim
- 55"x 9"x 6"
- 19 lbs.

SPEAKER STAND MOUNTING ADAPTER

LATSA1

LATSA1WHT

- Convenient mounting tripod adapter accessory for speakers, followspots, and select lighting fixtures

Approx. Ext. Dim
- 8"x 3.25"x 4.5"
- 1 lbs.

SPEAKER STAND-IN MOUNTING ADAPTER

LATSA2

LATSA2WHT

- A handy "top hat" tripod pole adapter.

Approx. Ext. Dim
- 8"x 3.25"x 4.5"
- 1 lbs.

PHOTO BOOTH CABINET TRIPOD STAND FLANGE ADAPTER

LATSA3

- Accessory tripod adapter for secure and snug fits onto 1-3/8" tripod stand shafts or poles

Approx. Ext. Dim
- 4.5"x 3.5"x 4.5"
- 2 lbs.

1-1/2"speaker mounting adaptors
Mount to the bottom of the speaker

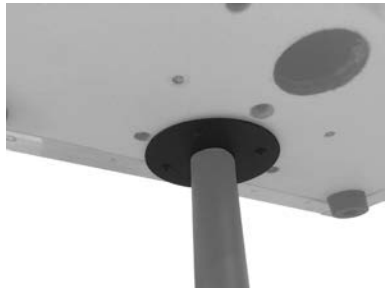

TRIPOD STAND WITH TOP 48" WIDE T-BAR AND 2 WIDE SIDE BARS 11 FT HIGH

LTP1
- Top T-Bar and 2 side bars

Approx. Ext. Dim
- 57"x 8" x 6"
- 19 lbs.

TRIPOD STAND WITH TOP T-BAR 12 FT HIGH

LTP2
LTP2WHT
- LUXE™ Series
- Standard Black

Approx. Ext. Dim
- 59"x 8.5" x 6.5"
- 22 lbs.

TRIPOD STAND WITH TOP T-BAR 9 FT HIGH

LTP6
LTP6WHT
- LUXE™ Series
- Standard Black

Approx. Ext. Dim
- 48"x 5.75" x 5.5"
- 8 lbs.

TOTE BAG FOR TRIPOD STANDS

BLTUNI
- Fits light column poles up to 5ft long

Approx. Ext. Dim
- 16"x 2" x 10"
- 2 lbs.

10 FOOT WIDE CRANK UP I BEAM TRUSS SYSTEM

LTMTS1PRO
- 10'W x 8.5' H Crank Up Mobile Truss System

Approx. Ext. Dim
- 64"x 12" x 9"
- 50 lbs.

10 FOOT WIDE PORTABLE I BEAN LIGHTING STAND SYSTEM WITH DUAL T BAR EXTENSIONS

LTMTS3
- Breaks down into 6 poqk aluminum/steel tripods which extend up to 9 feet. (2) 5 foot truss I-Beams when connected have a 10 foot span & (2) T-bars

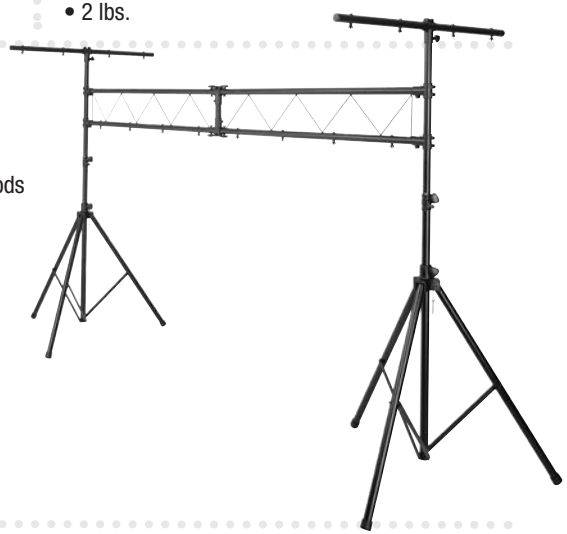

Approx. Ext. Dim
- 61"x 15" x 11"
- 38 lbs.

MTS-8 COMPACT MOBILE TRUSS SYSTEM

BLMTS8
BLMTS8WHT
- Breaks Down into 4 Pieces: Two Black Aluminum/Steel Tripods and Two 4' Long Truss I-beams

Approx. Ext. Dim
- 52"x 9" x 8.5"
- 28 lbs.

MOBILE TRUSS SYSTEM 10 FEET WIDE

LTMTS10
- Breaks Down into 6 Pieces: Two Tripods, Two Top Tripod Crossbars, and Two 5' Long Truss I-beams

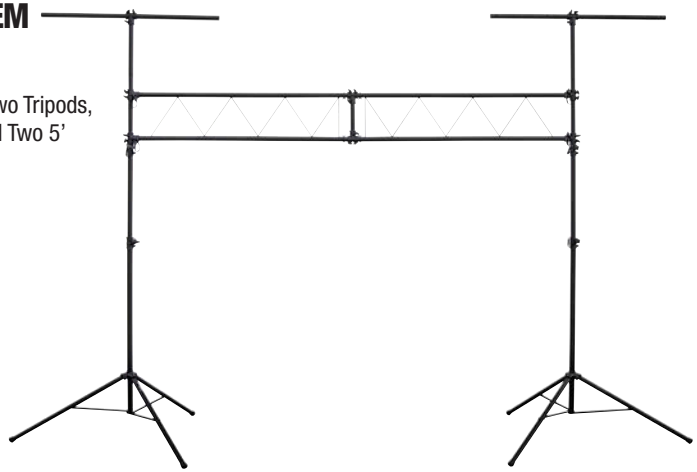

Approx. Ext. Dim
- 168" x 59-137.75"x 53"
- 37 lbs.

MOBILE "HALO" CRANK-UP TRUSS SYSTEM 10 FT WIDE

LTMTS10HPRO
LTMTS10HPROWHT

- Breaks down into 6 portable pieces: 2 Aluminum / Steel tripods which extend up to 9 ft (2) 5 ft truss I-Beams, when connected have a 10 ft span and (2) 30" in diameter Halos.
- 10 ft Wide Mobile Lighting 'Halo' Truss System

- 75 lbs.

Step 1:
Open and position tripods.

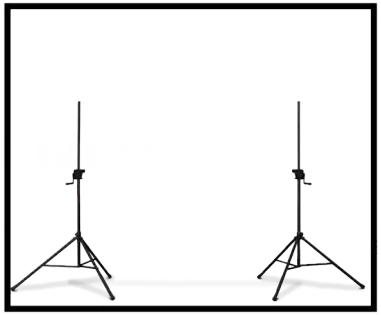

Step 2:
Connect IBeam Truss together and attach to tripod.

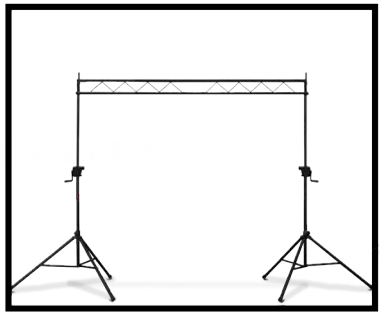

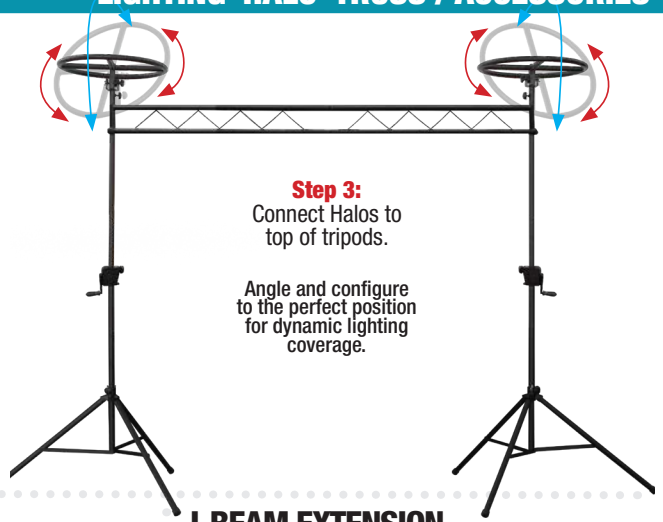

Step 3:
Connect Halos to top of tripods.

Angle and configure to the perfect position for dynamic lighting coverage.

MOBILE "HALO" TRUSS SYSTEM

LTMTS10H
LTMTS10HWHT

- Breaks down into 6 portable pieces: 2 Aluminum / Steel tripods which extend up to 9 ft (2) 5 ft truss I-Beams, when connected have a 10 ft span and (2) 30" in diameter Halos.
- 10 ft Wide Mobile Lighting 'Halo' Truss System

- 62 lbs.

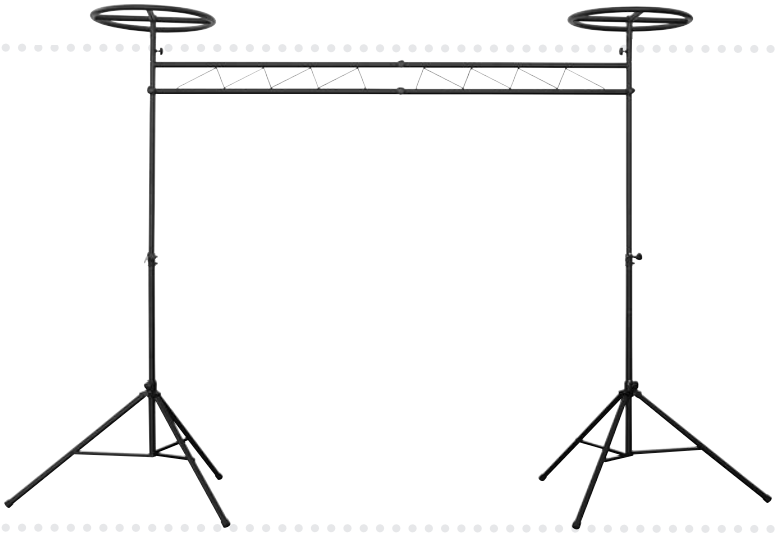

I-BEAM EXTENSION 5 FT LONG

LTIBEAM

- For The LTMTS1PRO & LTMTS3 Mobile Lighitng Truss Systems

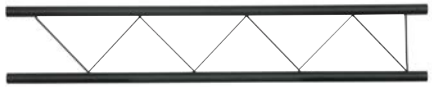

Approx. Ext. Dim
- 63"x 4" x 14"
- 5 lbs.

CARRYING BAG HOLDS TWO 30" DIAMETER HALO RINGS

BLTMTSHALO

- Designed to carry two 30" diameter Mobile Truss System 'Halo' rings

Approx. Ext. Dim
- 33"x 27.5" x .75"
- 1.6 lbs.

TOTE BAG FOR MOBILE TRUSS TRIPOD SYSTEM WITH WHEELS

BRLTMTSW

- **Can hold** the LTMTS1PRO, LTMTS3, or LTMTS10 truss systems

Approx. Ext. Dim
- 66"x 10.5" x 12.5"
- 9 lbs.

TOTE BAG FOR MOBILE TRUSS TRIPOD SYSTEMS

BLTMTS

- **Can hold** the LTMTS1PRO, LTMTS3, or LTMTS10 truss systems

Approx. Ext. Dim
- 60"x 9" x 11"
- 1.38 lbs.

TOTE BAG FOR MOBILE TRUSS TRIPOD SYSTEMS

BLTMTS8

- For LTMTS8 & LTMVSS8 Truss Systems & Light Column™ Poles Up To 4

Approx. Ext. Dim
- 53"x 8.5" x 8.25"
- 1 lbs.

VSS-8™ MOBILE VIDEO PROJECTION SCREEN SYSTEM

LTMVSS8

LTMVSS8WHT

- Black high quality aluminum/steel speaker tripod stand

Approx. Ext. Dim
- 53"x 9"x 8"
- 24 lbs.

VSS-8™ MOBILE VIDEO PROJECTION SCREEN SYSTEM LOWER BAR ACCESSORY

LTMVSS8BAR

- Optional lower bar accessory for the LTMVSS8 frame

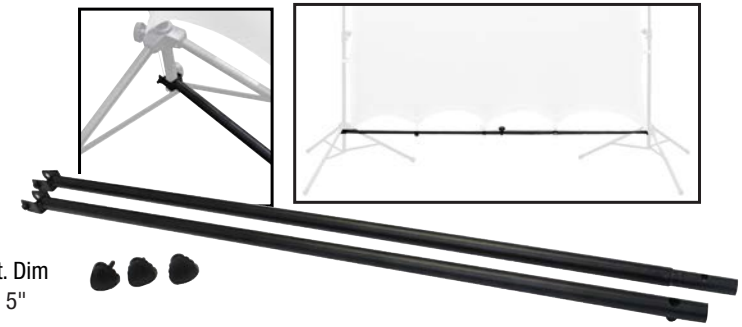

Approx. Ext. Dim
- 5"x 13"x 5"
- 1 lbs.

VSS-L MOBILE VIDEO PROJECTION SCREEN SYSTEM

LTMVSS1014L

- Standard White Screen Black frame

Approx. Ext. Dim
- 57"x 12"x 11"
- 55 lbs.

VSS-L MOBILE VIDEO PROJECTION SCREEN FRAME

LTMVSLFRAME

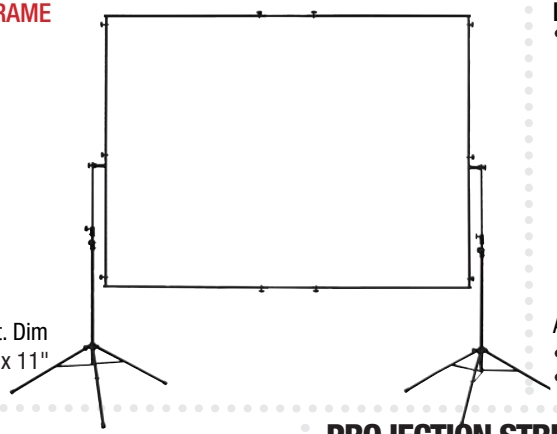

Approx. Ext. Dim
- 57"x 12"x 11"
- 55 lbs.

VSS-1RT "RAISE AND TILT" MOBILE VIDEO PROJECTION SCREEN FRAME

LTMVS1RTFRAME

- Screen Frame Tilts 360 Degrees

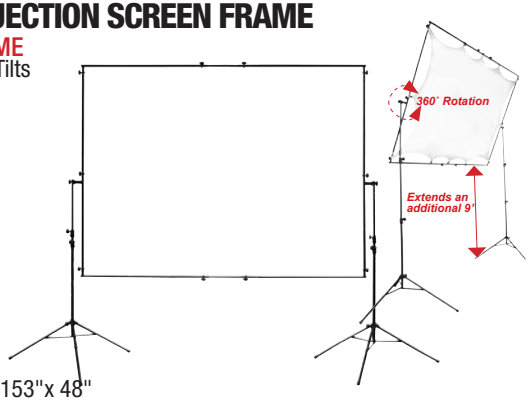

Approx. Ext. Dim
- 144-156"x 95-153"x 48"
- 38 lbs.

VSS-1RT "RAISE AND TILT" MOBILE VIDEO PROJECTION SCREEN SYSTEM

LTMVSS1RT

- Standard Black

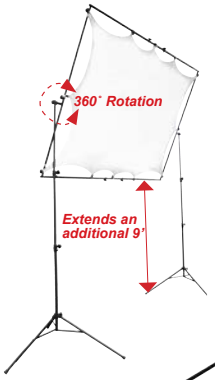

Approx. Ext. Dim
- 57"x 12"x 11"
- 55 lbs.

PROJECTION STRETCH SCREEN 90" X 60" WITH 24 ATTACHMENT POINTS

LTMVSCREEN3

- Scrim Werks™
- 24 attachment loops
- Rear projection compatible

Approx. Ext. Dim
- 16.5"x 12.5"x 3"
- 4 lbs.

PAR 16 HIGH POLISH ALUMINUM CAN

LSPAR16
- High Polish Aluminum Exterior
- E26/E27 Medium Screw Bulb Base (standard household base)

*(lamp not included)

Approx. Ext. Dim
- 4"x 3.25"x 5.5"
- 0.65 lbs.

PAR 16 WHITE POWDER COAT ALUMINUM CAN

LSPAR16W
- White Aluminum Exterior
- E26/E27 Medium Screw Bulb Base (standard household base)

*(lamp not included)

Approx. Ext. Dim
- 4"x 3.25"x 5.5"
- 0.65 lbs.

PAR 16 BLACK ALUMINUM CAN

LSPAR16B
- Black Aluminum Exterior
- E26/E27 Medium Screw Bulb Base (standard household base)

*(lamp not included)

Approx. Ext. Dim
- 4"x 3.25"x 5.5"
- 0.65 lbs.

PAR 20 HIGH POLISH ALUMINUM CAN

LSPAR20
- High Polish Aluminum Exterior
- E26/E27 Medium Screw Bulb Base (standard household base)

*(lamp not included)

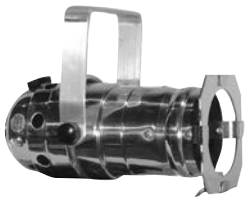

Approx. Ext. Dim
- 4.5"x 3.5"x 6.75"
- 0.65 lbs.

PAR 20 WHITE ALUMINUM CAN

LSPAR20W
- White Aluminum Exterior
- E26/E27 Medium Screw Bulb Base (standard household base)

*(lamp not included)

Approx. Ext. Dim
- 4.5"x 3.5"x 6.75"
- 0.65 lbs.

PAR 20 BLACK ALUMINUM CAN

LSPAR20B
- Black Aluminum Exterior
- E26/E27 Medium Screw Bulb Base (standard household base)

*(lamp not included)

Approx. Ext. Dim
- 4.5"x 3.5"x 6.75"
- 0.65 lbs.

PAR 30 WHITE ALUMINUM CAN

LSPAR30W
- White Aluminum Exterior
- E26/E27 Medium Screw Bulb Base (standard household base)

*(lamp not included)

Approx. Ext. Dim
- 5.5"x 4.5"x 8.5"
- 1 lbs.

BARN DOOR FOR ODYSSEY PAR 16 LIGHT FIXTURES

LSPAR16BDP
- High Polish Aluminum Exterior

LSPAR16BDB
- Black Aluminum Exterior

LSPAR16BDW
- White Aluminum Exterior
- Fits Odyssey Par 16 Can Light Fixtures

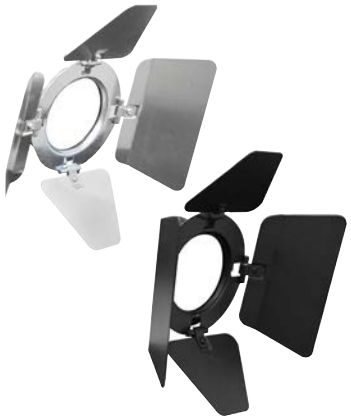

Approx. Ext. Dim
- 4.25"x 3.25"x 0.75"
- 0.05 lbs.

BARN DOOR FOR ODYSSEY PAR 20

LSPAR20BDB
- Black Aluminum Exterior

LSPAR20BDP
- High Polish Aluminum Exterior

LSPAR20BDW
- White Aluminum Exterior
- Par 20 Barn Door

Approx. Ext. Dim
- 4.25"x 3.25"x 0.75"
- 0.05 lbs.

BARN DOOR FOR ODYSSEY PAR 30

LSPAR30BDB
- Black Aluminum Exterio

LSPAR30BDW
- White Aluminum Exterior

Approx. Ext. Dim
- 4.25"x 3.25"x 0.75"
- 0.05 lbs.

MINI C CLAMP IN LIGHT-DUTY

LACM
LACMB
- Light-Duty Mini C Clamp Design

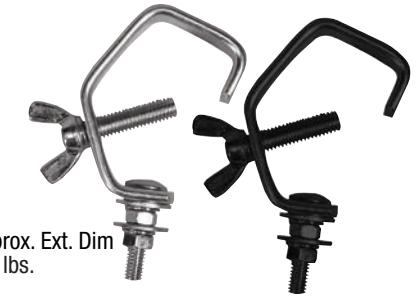

Approx. Ext. Dim
- 1 lbs.

LIGHITNG MINI C CLAMP IN BLACK STANDARD-DUTY

LAC06
- Used for 1.5" Diameter Truss Tubes

Approx. Ext. Dim
- 1"x 5"x 3"
- 1 lbs.

1-1/4 - 2" C-CLAMP

LAC28
- Aluminum and Steel Construction
- Working load limits: 220 lbs (100 kg)

Approx. Ext. Dim
- 1"x 5.5"x 4.25"
- 0.5 lbs.

LIGHITNG MINI C CLAMP IN BLACK MEDIUM-DUT

LACC
- Medium-Duty Mini C Clamp Design

Approx. Ext. Dim
- 1 lbs.

1" - 2" G CLAMP

LACP
LACPB
- Working Load Limit: 661 lbs (300 kg)

Approx. Ext. Dim
- 1"x 7"x 5"
- 1 lbs.

2" TRIGGER PRO CLAMPS

LACT28
LACT28B
- Wrap around hook design
- Working Load Limit: 330 lbs (150 kg)

Approx. Ext. Dim
- 1.125"x 8"x 4"
- 1 lbs.

2" QUICK RIG PRO CLAMP

LACQ30
LACQ30B
- Wrap around hook design
- Working Load Limit: 330 lbs (150 kg)

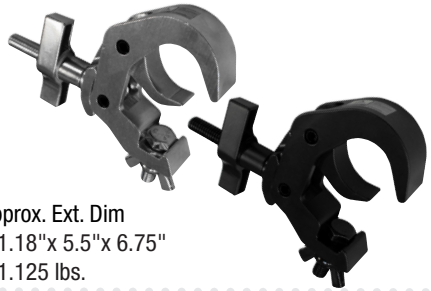

Approx. Ext. Dim
- 1.18"x 5.5"x 6.75"
- 1.125 lbs.

LIGHITNG O-CLAMP

LAC02
- Used for mounting lighting to Truss with 2" tubing

Approx. Ext. Dim
- 1 lbs.

2" SLIM HALF COUPLERS WITH A HEX BOLT AND STANDARD WING NUT

LACMS30
LACMS30B
- HEX BOLT w/Standard Wing Nut
- Working Load Limit: 165 lbs (75 kg)

Approx. Ext. Dim
- 1.4"x 4"x 3.5"
- 0.38 lbs.

2" SLIM HALF COUPLERS WITH A HEX BOLT AND LARGE WING NUT

LACML30
LACML30B
- HEX BOLT w/Large Wing Nut
- Working load Limit: 165 lbs (75 kg)

Approx. Ext. Dim
- 1.4"x 4.5"x 3.5"
- 0.38 lbs.

2" NARROW HALF COUPLERS WITH A ROUND NECK COUNTERSUNK BOLT

LACP30R
LACP30RB
- Working load Limit: 661 lbs (300 kg)

Approx. Ext. Dim
- 1.13"x 4.75"x 4.5"
- 0.73 lbs.

2" HALF COUPLERS WITH A ROUND NECK COUNTERSUNK BOLT

LACP50R
LACP50RB
- Wide With Round Neck
- Working Load Limit: 1.102 lbs (500 kg)

Approx. Ext. Dim
- 2"x 5"x 4.25"
- 1 lbs.

2" NARROW HALF COUPLERS WITH A SQUARE NECK COUNTERSUNK BOLT

LACP30S
LACP30SB

- Working load Limit: 661 lbs (300 kg)

Approx. Ext. Dim
- 1.13"x 4.75"x 4.5"
- 0.73 lbs.

2" HALF COUPLERS WITH A SQUARE NECK COUNTERSUNK BOLT

LACP50S
LACP50SB

- Wide With Square Neck
- Working Load Limit: 1.102 lbs (500 kg)

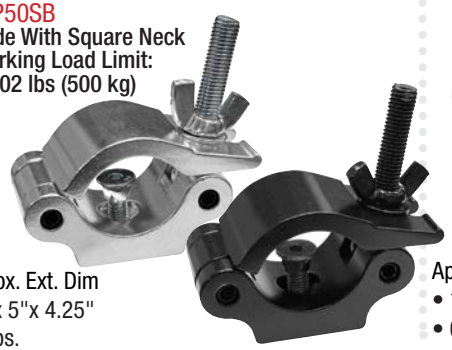

Approx. Ext. Dim
- 2"x 5"x 4.25"
- 1 lbs.

2" NARROW HALF COUPLER WITH EYE BOLT

LACPE30
LACPE30B

Approx. Ext. Dim
- 1.18"x 6.125"x 4.25"
- 0.875 lbs.

2" HALF COUPLER WITH EYE BOLT

LACPE50
LACPE50B

Approx. Ext. Dim
- 2"x 6.5"x 4.25"
- 1.25 lbs.

2" NARROW SWIVEL COUPLERS

LACSDP30
LACSDP30B

Approx. Ext. Dim
- 1.18"x 8"x 4.25"
- 1.375 lbs.

2" SWIVEL COUPLERS

LACSDP50
LACSDP50B

Approx. Ext. Dim
- 2 lbs.

3/4" MINI HALF COUPLERS

LAC25XS - ALUMINUM FINISH
LAC25XSB - BLACK FINISH
LAC25XSW - WHITE FINISH

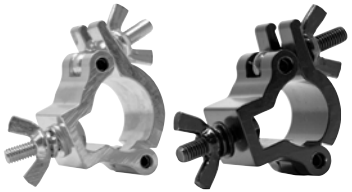

Approx. Ext. Dim
- 1"x 3"x 2"
- 0.24 lbs.

1" SMALL HALF COUPLERS

LAC25S - ALUMINUM FINISH
LAC25SB - BLACK FINISH
LAC25SW - WHITE FINISH

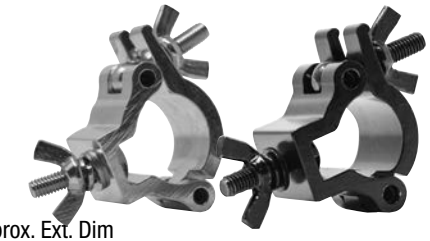

Approx. Ext. Dim
- 1"x 3"x 2.25"
- 0.31 lbs.

3/4" MINI HALF COUPLER WITH EYE BOLT

LACE25XS - ALUMINUM FINISH
LACE25XSB - BLACK FINISH
LACE25XSW - WHITE FINISH

Approx. Ext. Dim
- 1"x 3.5"x 2"
- 0.24 lbs.

1" SMALL HALF COUPLER WITH EYE BOLT

LACE25S - ALUMINUM FINISH
LACE25SB - BLACK FINISH
LACE25SW - WHITE FINISH

Approx. Ext. Dim
- 1"x 3"x 2.25"
- 0.31 lbs.

3/4" MINI SWIVEL COUPLERS

LACSD25XS - ALUMINUM FINISH
LACSD25XSB - BLACK FINISH
LACSD25XSW - WHITE FINISH

Approx. Ext. Dim
- 1"x 4"x 2"
- 0.29 lbs.

1" SMALL SWIVEL COUPLERS

LACSD25S - ALUMINUM FINISH
LACSD25SB - BLACK FINISH
LACSD25SW - WHITE FINISH

Approx. Ext. Dim
- 1"x 4"x 2.25"
- 0.44 lbs.

1 FOOT HIGH LIGHT COLUMN
SWLC01
- 17"x 12.25"x 17"
- 18 lbs.

2 FEET HIGH LIGHT COLUMN
SWLC02
- 17"x 24.25"x 17"
- 20 lbs.

3 FEET HIGH LIGHT COLUMN
SWLC03
- 17"x 36.25"x 17"
- 22 lbs.

4 FEET HIGH LIGHT COLUMN
SWLC04
- 17"x 48.25"x 17"
- 23 lbs.

5 FEET HIGH PRO LIGHT COLUMN
SWLC05PRO
- 17"x 60.25"x 17" • 31 lbs.

6 FEET HIGH PRO LIGHT COLUMN
SWLC06PRO
- 17"x 72.25"x 17" • 33 lbs.

7 FEET HIGH PRO LIGHT COLUMN
SWLC07PRO

8 FEET HIGH PRO LIGHT COLUMN
SWLC08PRO
- 24"x 96.25"x 24"• 45 lbs.

9 FEET HIGH PRO LIGHT COLUMN
SWLC09PRO
- 24"x 108.25"x 24" • 50 lbs.

10 FEET HIGH PRO LIGHT COLUMN
SWLC10PRO
- 24"x 120.25"x 24" • 52 lbs.

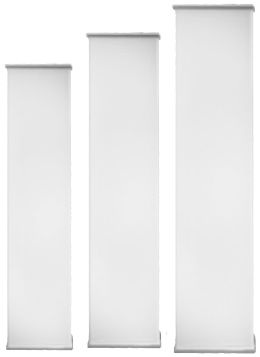

SCRIM WERKS™ LONG TRUSS SLIP SCREEN™
TS1205 (5FT)
- 10"x 5"x 5" • 1 lbs.

TS1208 (8FT)
- 12"x 5"x 5" • 2 lbs.

TS1210 (10FT)
- 12"x 5"x 5" • 2 lbs.

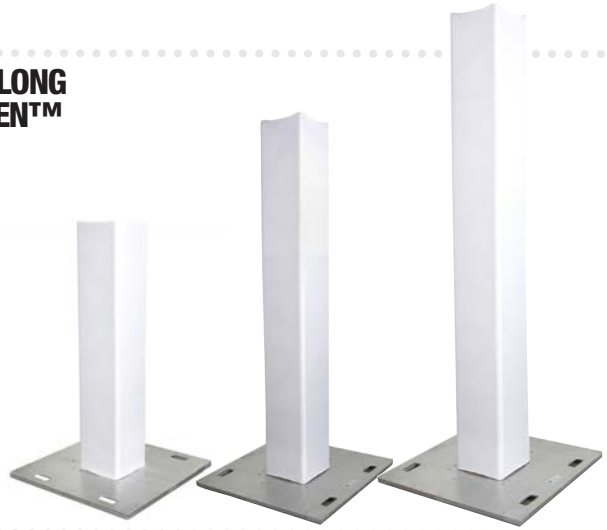

LONG SLIP SCREEN™ W/ZIPPER ACCESS HOLES
TSZ1203 (3FT)
- 8"x 7"x 1.75" • .06 lbs.

TSZ1205 (5FT)
- 10"x 8.5"x 1.75" • .09 lbs.

TSZ1208 (8FT)
- 10"x 8.5"x 2" • 1.3 lbs.

TSZ1210 (10FT)
- 10"x 8.5"x 2.75" • 1.6 lbs.

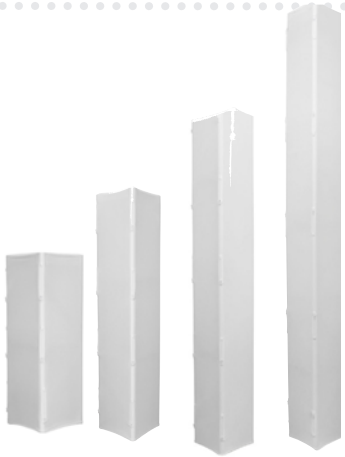

12" X 12" SQUARE TRUSS ACCESS SERIES II PRO SLIP SCREEN™ W/ZIPPER ACCESS HOLES

TS1202CZ - For 2' long truss
- 14"x 14"x 1"
- 0.45 lbs

TS1203CZ - For 3' long truss
- 14"x 14"x 1.25"
- 0.55 lbs.

TS1204CZ - For 4' long truss
- 14"x 14"x 1.5"
- 0.65 lbs.

TS1205CZ - For 5' long truss
- 14"x 14"x 2"
- 1.5 lbs

TS1208CZ - For 8' long truss
- 14"x 14"x 2"
- 2.3 lbs

TS1210CZ - For 10' long truss
- 14"x 14"x 2.75"
- 2.8 lbs.

12" X 12" SQUARE TRUSS ACCESS SERIES BLACK SLIP SCREEN™ W/ZIPPER ACCESS HOLES
TS1206CZBLK - For 6' long truss
- 14"x 14"x 2"
- 1.9 lbs

TS1208CZBLK - For 8' long truss
- 14"x 14"x 2"
- 2.3 lbs.

TS1210CZBLK - For 10' long truss
- 14"x 14"x 2.75"
- 2.8 lbs.

24" X 24" LIGHT COLUMN PLATE

SWLCBP24

Approx. Ext. Dim
- 24"x 1"x 24"
- 15 lbs.

30" X 30" LIGHT COLUMN PLATE

SWLCBP30

Approx. Ext. Dim
- 30"x 1"x 30"
- 22 lbs.

36" X 36" LIGHT COLUMN PLATE

SWLCBP30

Approx. Ext. Dim
- 36"x 1"x 36"
- 33 lbs.

CARRY BAG HOLDS UP TO TWO 24"x 24" PLATES OR SMALLER

BSWLCB24

Approx. Ext. Dim
- 24.25"x 24.25"x 4"
- 2 lbs.

TOTE BAG FOR UP TO 2 FEET LONG LIGHT COLUMN POLES

BSWLCP02

Approx. Ext. Dim
- 28"x 8.25"x 8"
- 1.1 lbs.

TOTE BAG FOR UP TO 3 FEET LONG LIGHT COLUMN POLES

BSWLCP03

Approx. Ext. Dim
- 40"x 8.25"x 8"
- 1.2 lbs.

TOTE BAG FOR UP TO 4 FEET LONG LIGHT COLUMN POLES

BSWLCP04

Approx. Ext. Dim
- 40"x 8.25"x 8"
- 1.2 lbs.

STRETCH COVER FOR 12" MOLDED SPEAKERS SLIP SCREEN™

SWSPKWHT
SWSPKBLK

Approx. Ext. Dim
- 7"x 5"x 5"
- 0.5 lbs.

LIGHT COLUMN SPEAKER STUD ADAPTER

SWLCSPKSTUD
- 1-3/8" Diameter
- 3" High Stud
- High Grade Aluminum Construction
- Includes Mounting Wing Nut Bolt For Easy Set-Up
- Fits All Odyssey "SWLC" Scrim Werks™ Light Column Plates

Approx. Ext. Dim
- 1.5"x 4"x 1.5"
- 1 lbs.

EYE-CATCHING! EXTRAORDINARY! AND EXCEPTIONALLY STIMULATING!

IT'S TIME TO RAISE THE BAR!

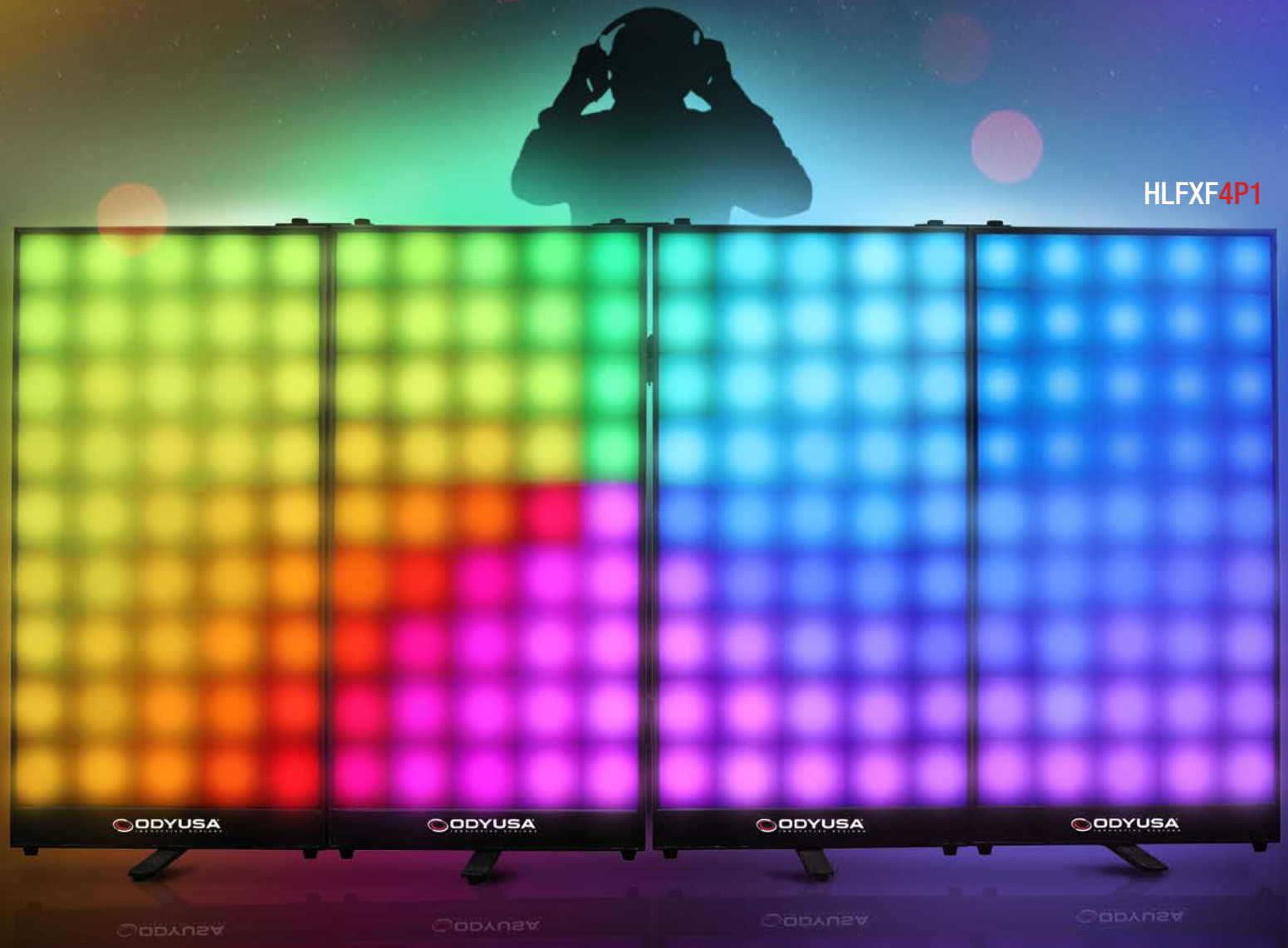

WARNING: Using this product to augment your musical performance may cause members of your audience to have uncontrollable urges to dance and party!

ODY SHEILDS UPLIGHT DECOR 15" HIGH

ODYSHLD1508BLK
- 15" HIGH UPLIGHT DECOR, SET OF 8 PCS

LIGHTS SOLD SEPERATLY

Approx. Ext. Dim
- 20.5"x 10.5"x 15"
- 26 lbs.

ODY SHEILDS UPLIGHT DECOR 20" HIGH

ODYSHLD12008BLK
- 20" HIGH UPLIGHT DECOR, SET OF 8 PCS

LIGHTS SOLD SEPERATLY

Approx. Ext. Dim
- 25.5"x 10.5"x 15"
- 32 lbs.

FOUR PANEL HEADLINER FX LED FAÇADE

HLFXF4P1
- FOUR Panel HEADLINER FX Facade with Tour Case
- Road Package Available

Approx. Ext. Dim
- 48.5"x 34"x 12.75"
- 139 lbs.

PRO DJ FACADE WHITE WITH A BLACK FRAME

SWF4846B
SWF4846WHT
SWF4846BLK
- Floor Façade

Approx. Ext. Dim
- 48"x 48"x 24"
- 32 lbs.

PRO DJ FACADE WHITE WITH A BLACK FRAME

SWF7246B
SWF7246WHT
SWF7246BLK
- Floor Façade

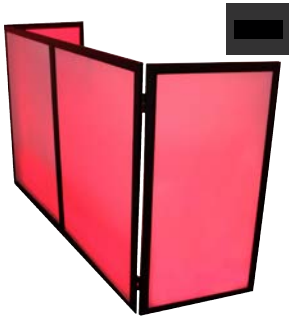

Approx. Ext. Dim
- 72"x 46"x 24"
- 37 lbs.

PRO DJ FACADE WHITE WITH A BLACK FRAME

SWF9646B
- Floor Façade

Approx. Ext. Dim
- 96"x 46"x 36"
- 43 lbs.

TABLE TOP PRO DJ FACADE WHITE WITH A BLACK FRAME

SWFTT5818B
- Floor Façade

Approx. Ext. Dim
- 58.5"x 16"x 20"
- 19 lbs.

29"W X 16"H CENTER ADD ON PANEL FOR THE SWFTT5816B TABLE TOP PRO DJ FACADE

SWFTT2916B-2

Approx. Ext. Dim
- 29.25"x 16"x 1.25"
- 4 lbs.

24"W X 46"H ADD-ON PANEL FOR 46" HIGH PRO DJ FACADES WITH REMOVABLE PIN HINGES

SWF2446B-2RP

Approx. Ext. Dim
- 24.25"x 46"x 1.25"
- 8 lbs.

36"W X 46"H ADD-ON PANEL FOR 46" HIGH FIRST EDITION PRO DJ FACADES WITH FLAG HINGE

SWF3646B-2RP

Approx. Ext. Dim
- 36.25"x 47.25"x 1.25"
- 9 lbs.

24"W X 46"H ADD-ON PANEL FOR 46" HIGH PRO DJ FACADES WITH REMOVABLE PIN HINGES

SWF2446B-2RP

Approx. Ext. Dim
- 24.25"x 46"x 1.25"
- 8 lbs.

29"W X 16"H CENTER ADD ON PANEL FOR THE SWFTT5816B TABLE TOP PRO DJ FACADE

SWFTT2916B-2

Approx. Ext. Dim
- 29.25"x 16"x 1.25"
- 4 lbs.

9 PIECE 22" DIAMETER WHITE CIRCULAR DISPLAY SET

SWDC22WHTX9

Approx. Ext. Dim
- 23.25"x 23.25"x 1.75"
- 6 lbs.

SINGLE 48"X 19" WHITE DIAMOND DISPLAY PIECE

SWDD4819WHT

Approx. Ext. Dim
- 10"x 8.75"x 1"
- 0.25 lbs.

3 PIECE 48" X 19" WHITE DIAMOND DISPLAY SET

SWDD4819WHTX3

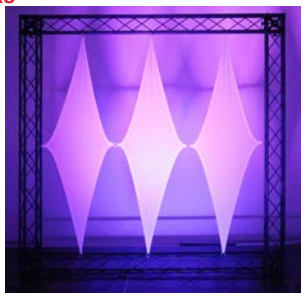

Approx. Ext. Dim
- 10"x 8.5"x 1.75"
- 1 lbs.

21 PIECE 12" X 12" WHITE DIAMOND(DIAGONAL SQUARES) DISPLAY PACKAGE

SWDS12WHT

Approx. Ext. Dim
- 12"x 6"x 6"
- 3 lbs.

9 PIECE 18" X 18" WHITE SQUARE DISPLAY SET

SWDS18WHTX9

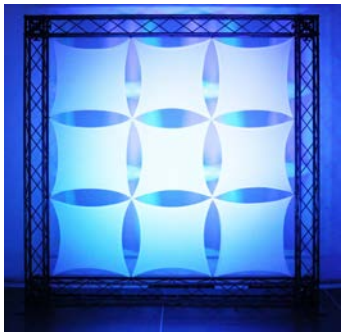

Approx. Ext. Dim
- 12.5"x 9.75"x 2.5"
- 2 lbs.

21 PIECE 19" EQUILATERAL WHITE TRIANGLE DISPLAY SET PACKAGE

SWDT19WHT

Approx. Ext. Dim
- 12"x 6"x 6"
- 5 lbs.

71" X 71" DECOR PANEL™ BLACK DISPLAY TRUSS FRAME PACKAGE

NEX15180SWDBLK
•Nexus Truss Frame

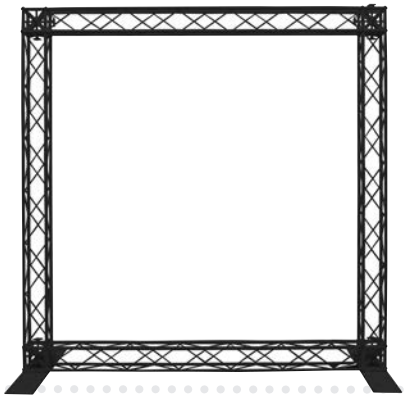

Approx. Ext. Dim
• 83"x 84"x 36"
• 86 lbs.

71" X 71" DECOR PANEL™ WHITE DISPLAY TRUSS FRAME PACKAGE

NEX15180SWDWHT
•Nexus Truss Frame

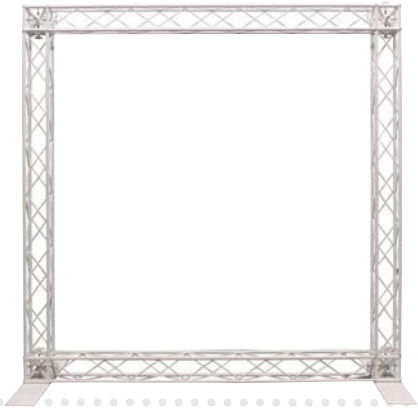

Approx. Ext. Dim
• 83"x 84"x 36"
• 86 lbs.

BLACK OR WHITE X STAND SLIP SCREEN™

SPALTBXSBLK
SPALTBXSWHT
• Scrim Werks™

Approx. Ext. Dim
• 5"x 13"x 5"
• 1 lbs.

DUAL 52" X 68" PANEL SECTION TRIPOD SCRIM

SWTP3WHT
SWTP3BLK
• Scrim Werks™

Approx. Ext. Dim
• 10"x 5"x 5"
• 2 lbs.

DUAL 72" X 110" PANEL SECTION BLACK TRIPOD SCRIM

SWTP5BLK
• Scrim Werks™

Approx. Ext. Dim
• 12"x 6"x 6"
• 3 lbs.

84" X 120" TRIANGULAR DESIGNER STRETCH SCRIMS

SPATR15WHT
SPATR15BLK
• Scrim Werks™

Approx. Ext. Dim
• 10"x 5"x 5"
• 2 lbs.

360 DEGREE TRIPOD STAND SLIP SCREEN™

SWLTPSWHT
SWLTPSBLK
• Scrim Werks™

Approx. Ext. Dim
• 10"x 5"x 5"
• 1 lbs.

60" X 88" TRIANGULAR SCRIM

SWT6088WHT
SWT6088BLK
• Scrim Werks™

Approx. Ext. Dim
• 15"x 5"x 5"
• 3 lbs.

15 FT. HIGH CRANK STAND SLIP SCREEN™ DESIGNER SCRIM

SPACS15WHT
SPACS15BLK
• Scrim Werks™

Approx. Ext. Dim
• 16.75"x 15.75"x 2.5"
• 4 lbs.

TABLE COVER 4 FT.BANQUET TABLE

SPATBL4BLK
SPATBL4WHT
Approx. Ext. Dim
- 11.75"x 10"x 2.5"
- 1.4 lbs.

TABLE COVER 6 FT. BANQUET TABLE

SPATBL6BLK
SPATBL6WHT
Approx. Ext. Dim
- 15"x 12.5"x 2"
- 3 lbs.

TABLE COVER CUSTOM 4 FT. BANQUET TABLE COVER

SPATBL4001CP
Approx. Ext. Dim
- 15"x 12.5"x 2"
- 2 lbs.

TABLE COVER CUSTOM 6 FT. BANQUET TABLE COVER

SPATBL6001CP
Approx. Ext. Dim
- 15"x 12.5"x 2"
- 3 lbs.

TABLE COVER 4 FT. BANQUET PROPS

SPATBL4002PT
Approx. Ext. Dim
- 15"x 12.5"x 2"
- 2 lbs.

TABLE COVER 6 FT. BANQUET PROPS

SPATBL6002PT
Approx. Ext. Dim
- 15"x 12.5"x 2"
- 3 lbs.

PRIMERA IMPRESSA IP60 PHOTO PRINTER CARRYING BAG

BMSPRiiP60

Approx. Ext. Dim
- 18.25" x 15" x 11"
- 5 lbs.

STREEMLINE
THE NEW STANDARD IN DJ GEAR PROTECTION

DNP DS40 / DS80 PRINTER CASE

FRDNPDS40
Standard

Approx. Ext. Dim
- 16"x 10"x 19.25"
- 14 lbs.

FLIGHT READY

DNP DS40 / DS80 PRINTER CASE

FRDNPDS40BL
Black Label

Approx. Ext. Dim
- 16"x 10"x 19.25"
- 14 lbs.

FLIGHT READY

DNP DS40 / DS80 PRINTER CASE

FRDNPDS40N
- Natural Aluminum

Silver/Silver

Approx. Ext. Dim
- 16"x 10"x 19.25"
- 14 lbs.

FLIGHT READY

DNP DS40 / DS80 PRINTER CASE

FRDNPDS40WH
- White

White/Silver

Approx. Ext. Dim
- 16"x 10"x 19.25"
- 14 lbs.

FLIGHT READY

DNP DS620 PRINTER CASE WHITE ON CHROME SPECIAL EDITION

FZDNP620
FZDNP620WHT
FZDNP620BL
Standard
Black Label

Approx. Ext. Dim
- 15.75"x 14.5"x 18.5"
- 16 lbs.

FLIGHTZONE

DNP DS620 PRINTER CASE SPECIAL EDITION

FZDNPDS40
FZDNPDS40WHT
FZDNPDS40BL
Standard
Black Label
White/Silver

Approx. Ext. Dim
- 15.75"x 10"x 19"
- 17 lbs.

FLIGHTZONE

DNP DS-RX1 PRINTER CASE

FZDNPRX1
FZDNPRX1BL
- Flight Zone® Series

Standard
Black Label

Approx. Ext. Dim
- 14"x 10.25"x 19"
- 19 lbs.

FLIGHTZONE

HITI P520L PRINTER CASE

Standard
Black Label

FZHIT520
FZHIT520BL
• Flight Zone® Series

Approx. Ext. Dim
• 14"x 10.25"x 19"
• 19 lbs.

FLIGHTZONE

HITI P510 PRINTER CASE WITH WHEELS & PULLOUT HANDLE

Standard

FZHITIP510HW
• Flight Zone® Series

Approx. Ext. Dim
• 22"x 16.75"x 18"
• 32 lbs.

FLIGHTZONE

MITSUBISHI CP-D70DW PRINTER CASE

Standard
Black Label

FZMITD70
FZMITD70BL
• Flight Zone® Series

Approx. Ext. Dim
• 22"x 16.75"x 18"
• 32 lbs.

FLIGHTZONE

SINFONIA CS2/SHINKO COLOR STREAM CS2 CASE ALSO HOLDS MITSUBISHI CP-K60DW-S & CP-D80DW PRINTERS

Standard
Black Label

FZSINFONIACS2
FZSINFONIACS2BL
• Flight Zone® Series

Approx. Ext. Dim
• 14"x 10.5"x 21.25"
• 17 lbs.

FLIGHTZONE

PRINTER CASE WITH PULLOUT HANDLE & WHEELS

Standard

FZPRINTER1HW

Open Case

Approx. Ext. Dim
• 29.5"x 18"x 18.25"
• 44 lbs.

FLIGHTZONE

21" x 16" x 12"(int.) PRINTER BAG WITH PULLOUT HANDLE & WHEELS

BRLUT1HW
• Universal Bag
• Redline™ Series

Approx. Ext. Dim
• 17"x 26-39.75"x 16"
• 10 lbs.

ADJUSTABLE CHAIR

DJCHAIR
DJCHAIRWHT
• Supports Up To 300 lbs.
• Relieves Back and Leg Stress

LUXE ELEGANT MUSIC PRODUCTS

Approx. Ext. Dim
• 17"x 26-39.75"x 16"
• 10 lbs.

41"x 21.5" WIDE BENCH

BNCH
BNCHWHT
• Comfortable Cushioned Upholstery Top
• Removable Legs For Easy Transport and Storage

Approx. Ext. Dim
• 41"x 21.5"x 13.5"
• 26 lbs.

LUXE ELEGANT MUSIC PRODUCTS

MAJESTIC PHOTO BOOTH FLASH MOUNT ACCESSORY

PBBABYPIN9
• 9" LONG 5/8" BABY PIN
• 0.9"X 9.5"X 0.9"
• 0.3 LBS.
PBBABYPIN6
• 6" LONG 5/8" BABY PIN
• 0.9"X 6.75"X 0.9"
• 0.21 LBS.

MAJESTIC PHOTO BOOTH PRINTER STAND HOUSING STANDARD SIZE

PPBPC620 (SMALL)
• Houses Popular Standard Size Photo Printer Models by DNP, Brava, Mitsubishi and Sinfonia

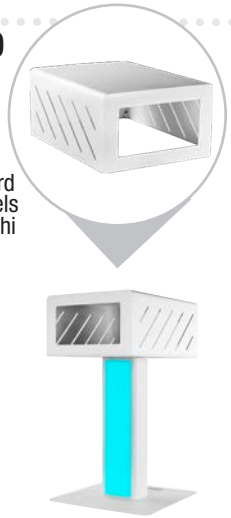

Approx. Ext. Dim
• 13.75" x 8.25" x 18"
• 6 lbs.

MAJESTIC PHOTO BOOTH PRINTER STAND HOUSING STANDARD SIZE

PPBPCRX1 (LARGE)
• Houses Popular Large Size Photo Printer Models by DNP, Brava, Mitsubishi and Sinfonia

Approx. Ext. Dim
• 13.75" x 13" x 18"
• 8 lbs.

MAJESTIC PHOTO BOOTH WITH BUILT-IN MODELING / STROBE LED

PBP03
• Eye Catching Multi-Color & Mode LED Wireless Remote System Built Into the Frame Posts and Kiosk
• Dedicated Printer Stand For Popular Photo Printer Models by DNP, Brava, Mitsubishi and Sinfonia

Approx. Ext. Dim
• 16" x 61.5" x 23"
• 35 lbs.

19" RACK MOUNTABLE BLANK PANELS

APB01
- 1U Rack Space (1.75")
- 1 lbs.

APB02
- 2U Rack Space (3.5")
- 1 lbs.

APB03
- 3U Rack Space (5.25")
- 1 lbs.

APB04
- 4U Rack Space (5.25")

19" RACK MOUNTABLE SLOTTED VENT PANEL

APV01
- 1U Rack Space (1.75")

APV02
- 2U Rack Space (3.5")

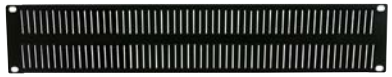

APV03
- 3U Rack Space (5.25")

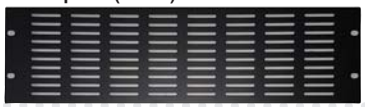

19" RACK MOUNTABLE FLAT PERFORATED PANEL

ARPVLP1
- 1U Rack Space (1.75")

ARPVLP2
- 2U Rack Space (3.5")

ARPVLP3
- 3U Rack Space (5.25")

ARPVLP4
- 4U Rack Space (7")

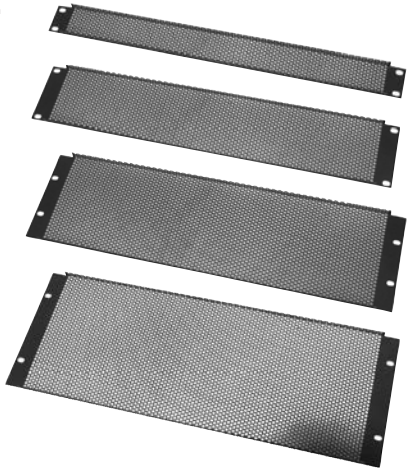

19" RACK MOUNTABLE RAISED PERFORATED PANEL

ARSCLP01
- 1U Rack Space (1.75")

ARSCLP02
- 2U Rack Space (3.5")

ARSCLP03
- 3U Rack Space (5.25")

ARSCLP04
- 4U Space (7")

19" RACK MOUNTABLE SINGLE FAN PANEL

AFP01
- 3U (5.25")

AFP02
- 3U (5.25")

AFP03
- 3U (5.25")

19" RACK MOUNTABLE SHELF

ARS1
- 1U (1.75")

ARS2
- 2U (3.5")

ARS3
- 3U (5.25")

ARS4
- 4U (7")

19" RACK MOUNTABLE SLIDING PULLOUT SHELF

ARPOT1
- 1U (1.75")

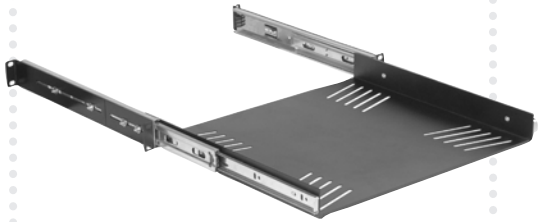

4.5" PANEL MOUNT COOLING FAN

AFAN45
- 3U (5.25")

19" RACK MOUNTABLE CLAMPING SHELF

ASC2
- 2U (3.5")

ASC3
- 3U (5.25")

ASC4
- 4U (7")

HALF RACK MOUNTABLE LOCKING DRAWER • 3U

ARHD03

Approx. Ext. Dim
- 10.25"W x 5.25"H x 11.75"D
- 9 lbs.

HALF RACK MOUNTABLE SHELF

ARHS1
- 1U (1.75")

Approx. Ext. Dim
- 10.25"W x 1.75"H x 10.5"D
- 2 lbs.

HALF RACK 1U RAISED PERFORATED SECURITY PANEL

ARHSCLP01
- 1U Rack Space (1.75")
- Sleek Black Exterior

Approx. Ext. Dim
- 10.25"W x 1.75"H x 1"D
- 0.2 lbs.

HALF RACK 2U RAISED PERFORATED SECURITY PANEL

ARHSCLP02
- 2U Rack Spaces (3.5")
- Sleek Black Exterior

Approx. Ext. Dim
- 10.25"W x 3.5"H x 1"D
- 0.6 lbs.

19 INCH RACK MOUNTABLE LOCKING DRAWER

ARDP02
- 2U

Approx. Ext. Dim
- 19"x 3.5"x 15.375"
- 14.2 lbs.

19 INCH RACK MOUNTABLE LOCKING DRAWER

ARDP03
- 3U

Approx. Ext. Dim
- 19"x 5.25"x 15.375"
- 19 lbs.

19 INCH RACK MOUNTABLE LOCKING DRAWER

ARDP04
- 4U

Approx. Ext. Dim
- 19"x 7"x 15.375"
- 21 lbs.

19 INCH RACK MOUNTABLE LOCKING DRAWER

ARDP05
- 5U

Approx. Ext. Dim
- 19"x 8.75"x 15.375"
- 22 lbs.

19" DICED FOAM SHEET FOR RACK MOUNTABLE DRAWERS

ADFRDH
- 1U Thick

Approx. Ext. Dim
- 15.5"x 1.75"x 15"
- 1 lbs.

19" RACK MOUNTABLE LOCKING DRAWER WITH INTERIOR DICED FOAM

ADFRD02
- 2U

Approx. Ext. Dim
- 19"x 3.5"x 15.375"
- 14.2 lbs.

19" RACK MOUNTABLE LOCKING DRAWER WITH INTERIOR DICED FOAM

ADFRD03
- 3U

Approx. Ext. Dim
- 19"x 5.25"x 15.5"
- 21 lbs.

19" RACK MOUNTABLE LOCKING DRAWER WITH INTERIOR DICED FOAM

ADFRD04
- 4U

Approx. Ext. Dim
- 19"x 7"x 15.5"
- 26 lbs.

19" RACK MOUNTABLE LOCKING DRAWER WITH INTERIOR DICED FOAM

ADFRD05
- 5U

Approx. Ext. Dim
- 21"x 8.75"x 15.5"
- 21 lbs.

19" RACK MOUNTABLE ANGLED TOP SHELF

ARTCA
- 10U (17.5")

Approx. Ext. Dim
- 19"x 2-3.5"x 17.5"
- 6 lbs.

19" RACK MOUNTABLE FLAT TOP SHELF

ARSTC
- 10U (17.5")

Approx. Ext. Dim
- 19"x 3.5"x 17.5"
- 5.4 lbs.

25, 50 AND 100 PACK RACK SCREWS & WASHERS

ASW025
ASW050
ASW0100

PAIR OF PRE-TAPPED RACK RAILS

ARR02
- 2U (3.5"

ARR04
- 4U (7")

ARR06
- 6U (10.5")

ARR08
- 8U (14")

ARR10
- 10U (17.5")

ARR12
- 12U (21")

ARR14
- 14U (24.5")

ARR16
- 16U (28")

ARR18
- 18U (31.5")

ARR21
- 21U (36.75")

ARR27
- 27U (37.25")

ARR45
- 45U (78.55")

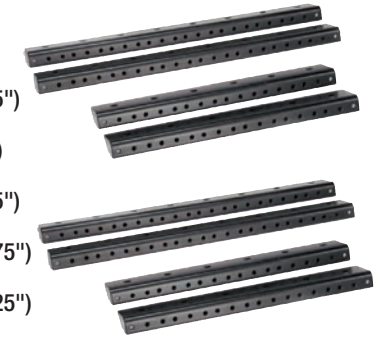

STAGE KREW™ GIG GLOVES

SKODYGM • Medium Gig Gloves
SKODYGL • Large Gig Gloves
SKODYGXL • Extra Large Gig Gloves

CHANGO WRENCH II™ Pat.Pending

Show Solutions Chango Wrench II is a must have multi-function handy tool for tightening and loosening wing nuts, bolts, and lighting clamps. Fits and works with most clamps and couplers plus more. Also works as handy bottle opener.

- Lightweight Aluminum Alloy
- Flat easy to fit in your back pocket
- Cool and Stylish
- A must have for any riggers tool belt.

AMW2BLK
PRO "Chango" Monkey Wrench II, Black

Examples of the many uses

Fits: 1/2" (M12)

Fits: M10

Fits: M1/4"

Fits: 1/2"

Fits: 3/8"

Handy Bottle Opener

AM2BLU PRO "Chango" Monkey Wrench II, Blue

AM2GLD PRO "Chango" Monkey Wrench II, Gold

AM2RED PRO "Chango" Monkey Wrench II, Red

AM2SIL PRO "Chango" Monkey Wrench II, Silver

PODGER RATCHET WRENCH

17, 21, 19, 24 mm

Podger Ratchet Wrench is the latest addition to the lineup of tools here at Show Solutions. Can be used on bolt head sizes 17, 19, 21 and 24mm.

- Long Thread Pass through design
- Flat Tip Pry Bar Design
- Socket sizes 17/21mm & 19/24mm
- Material: Cr-Mo, Handle: Cr-V (ie: impact socket)
- Finishing: Manganese phosphate
- Great tool for scafold professionals

REMIXER SERIES, TURNTABLE, TURNTABLE DJ COFFINS, UTILITY,AMP RACKS, CD/DVD/GAME DISC, CD/MEDIA PLAYER & TURNTABLE, CD/MEDIA PLAYER DJ COFFINS, COMBO RACKS, DJ CONTROLLER, DJ MIXER, FOLD-OUT STANDS, GLIDE STYLE, LP/UTILITY, SLIDE STYLE, STUDIO RACKS, TURNTABLE DJ COFFINS, VARIOUS,DECOR PANELS, DJ FACADES, LIGHT COLUMNS, SLIP SCREENS, TABLE SCRIMS, TRIANGULAR, TRIPOD/CRANK STAND SCRIMS, TRUSS SCRIMS, X-STAND SCRIMS, VIDEO SCRIMS, CONTROL, FLIGHT FX, FLIGHT READY, FLIGHT ZONE, GLIDE STYLE, GT GLIDE TRAY, KROM, BAGS,CD/MEDIA PLAYER, CD/MEDIA PLAYER, DJ CONTROLLER, DJ MIXER, TURNTABLE, TURNTABLE DJ COFFINS, ACCESSORIES, BLACK LABEL, CARPETED DESIGNER, DJ SERIES, FLIGHT FX, FLIGHT READY, FLIGHT

ODYSSEY® LEADING THROUGH INNOVATION | ODYUSA® INNOVATIVE DESIGNS

www.OdysseyGear.com

Odyssey Innovative Designs • 809 W. Santa Anita St, San Gabriel, CA 91776 •USA
PHONE: 626)588-2528 | FAX: 626) 588-2525

©2020 ODYSSEY INNOVATIVE DESIGNS. ALL RIGHTS RESERVED